| REV. | DESCRIPTION | DRAWN | DATE |
|---|---|---|---|
| | | APPROVED | DATE |

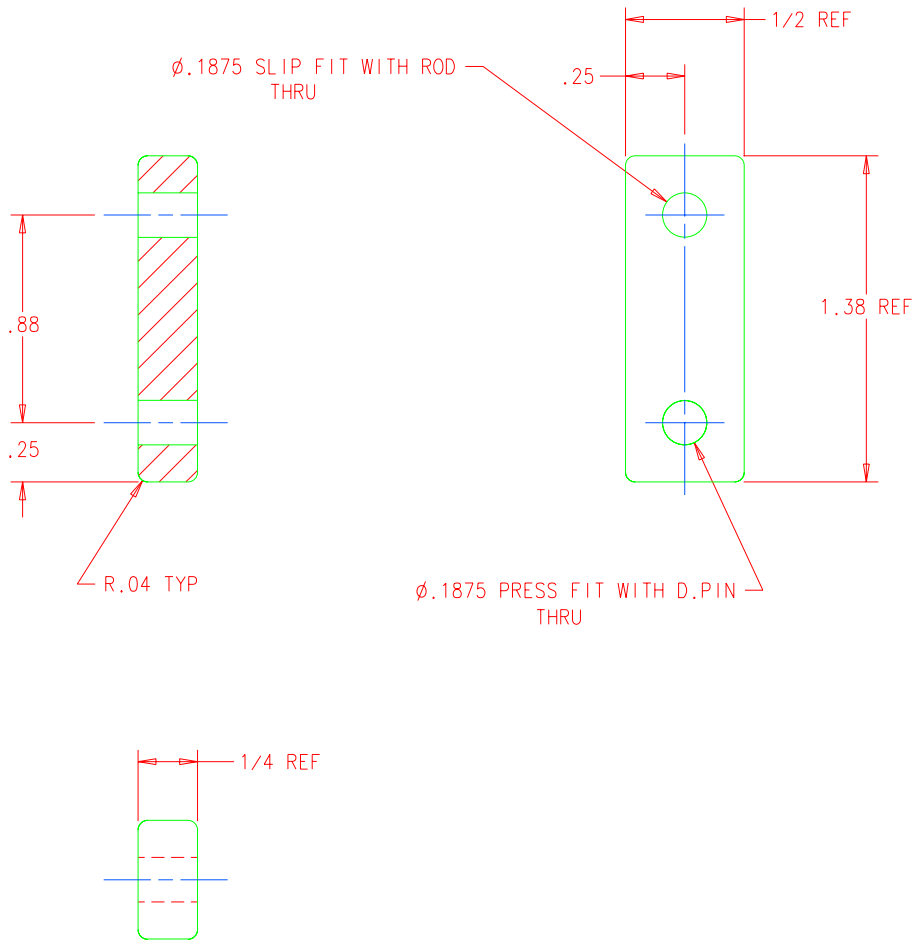


| ITEM NO. | PART NO. | DESCRIPTION OR SIZE | QTY. REQ. |
|---|---|---|---|

PARTS LIST

| UNLESS OTHERWISE SPECIFIED | | | ORIGINATOR | SCHMITT | |
|---|---|---|---|---|---|
| .XX | .XXX | ANGLES | DRAWN | F.YOFFE | 11.08.00 |
| ± .01 | ± .005 | ± —— | CHECKED | | |
| | | | APPROVED | | |

1. BREAK ALL OUTSIDE SHARP EDGES .04.
2. DO NOT SCALE DRWG.
3. DIMENSIONING IN ACCORD WITH ANSI Y14.5M-1982 STD'S.
4. ALL DIMENSIONS ARE IN INCHES.

125 MAX. ALL MACHINED SURFACES

USED ON: MC-397308

MATERIAL: LOW CARBON 1018 COLD DRAWN FLAT 1/4 X 1/2 X 1.38 LG

FERMI NATIONAL ACCELERATOR LABORATORY
UNITED STATES DEPARTMENT OF ENERGY

# PPD/MECHANICAL SUPPORT CDMS, LID LIFTING FIXTURE, FLANGE

| SCALE | DRAWING NUMBER | SHEET NO. | REV. |
|---|---|---|---|
| FULL | 9213.300-MB-397313 | 1 OF 1 | |