REV	DESCRIPTION	DRAWN	DATE
		APPROVED	DATE

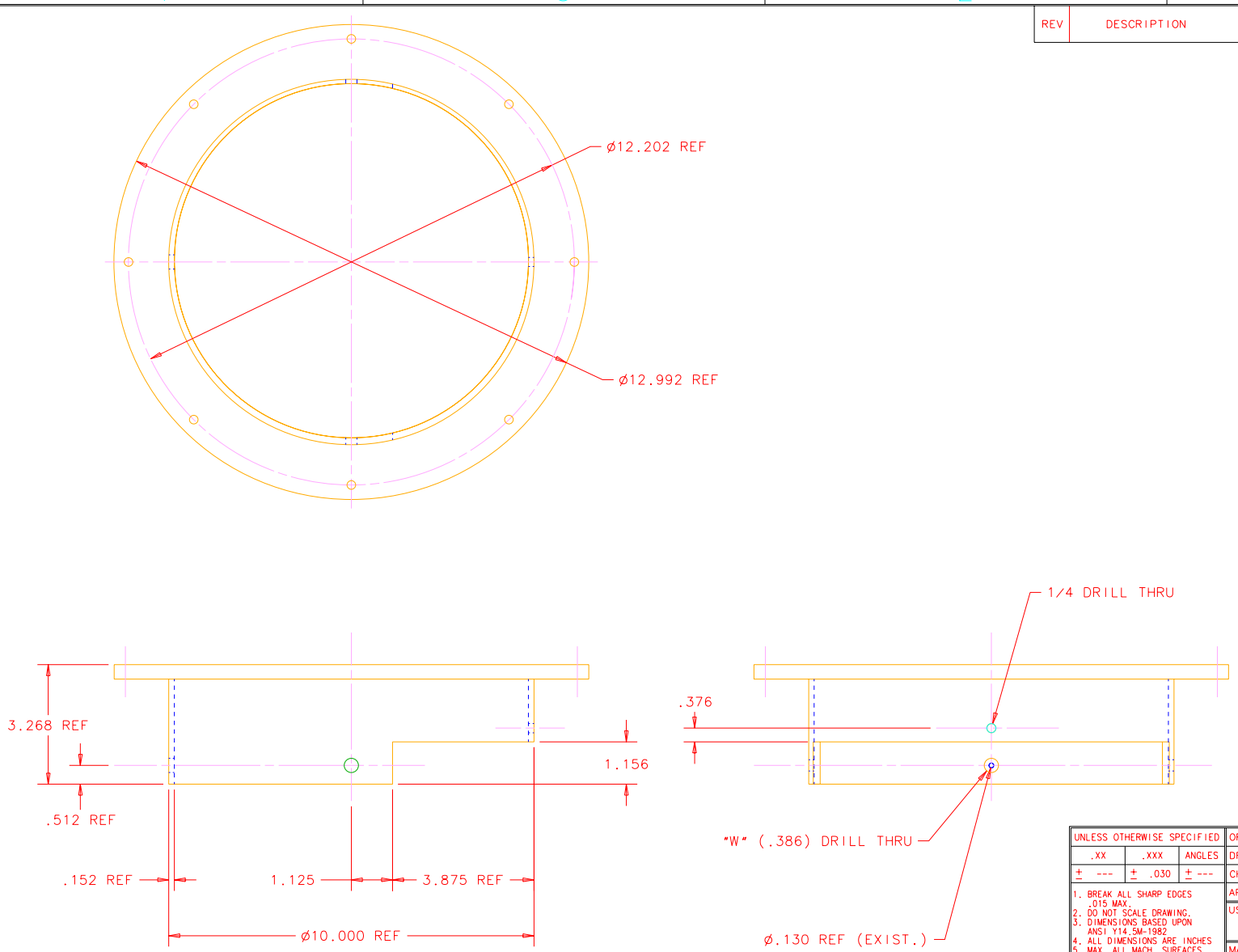

UNLESS OTHERWISE SPECIFIED			ORIGINATOR	R.SCHMITT	08-MAR-2002
.XX	.XXX	ANGLES	DRAWN	D.FRIEND	08-MAR-2002
± ---	± .030	± ---	CHECKED	C.NILA/D.FRIEND	08-MAR-2002
			APPROVED	C.GROZIS	08-MAR-2002

1. BREAK ALL SHARP EDGES .015 MAX.
2. DO NOT SCALE DRAWING.
3. DIMENSIONS BASED UPON ANSI Y14.5M-1982
4. ALL DIMENSIONS ARE INCHES
5. MAX. ALL MACH. SURFACES 125

USED ON

MATERIAL
GOLD PLATED COPPER

FERMI NATIONAL ACCELERATOR LABORATORY
UNITED STATES DEPARTMENT OF ENERGY

PPD/MECHANICAL DEPARTMENT
CDMS; RADIATION SHIELD MOD'S
TOP SHIELD FLANGE MODIFICATIONS

SCALE	DRAWING NUMBER	SHEET	REV
1/2	3891.509-MC-397737	1 OF 1	

CREATED WITH : Ideas8m4 | GROUP: PPD/MECHANICAL DEPARTMENT