REQ	ITEM	PART NUMBER	DESCRIPTION
			COPPER, OFE 10100

USE ONLY STOCK APPROVED FOR THE W.I.M.P. PROJECT FROM ROY OKI OR JOHN TAYLOR

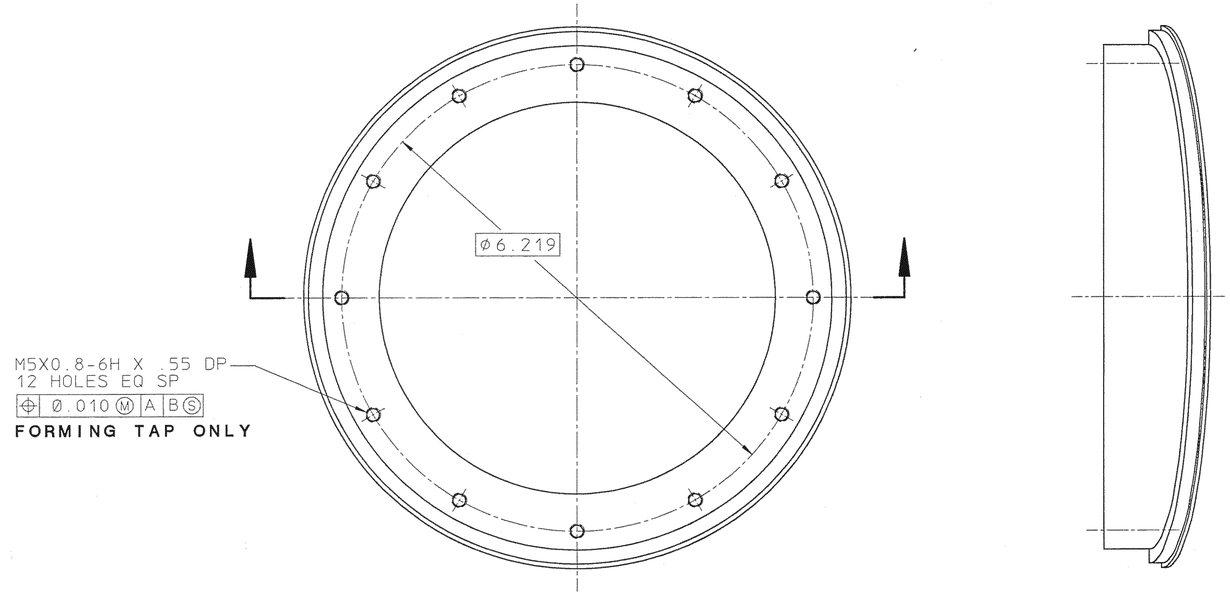

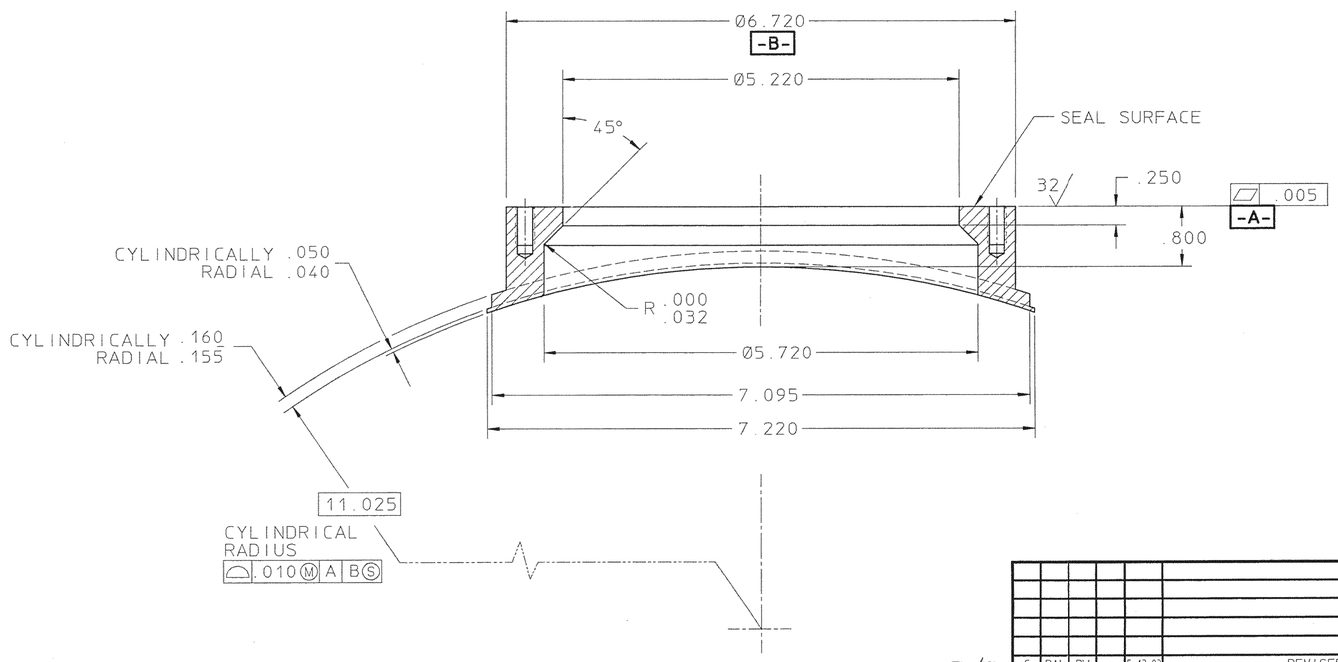

22G2774C

THERE SHALL BE NO SCRATCHES OR SCRIBE LINES OF ANY KIND ACROSS ANY SEAL SURFACE WHETHER THE DISFIGUREMENT IS WITHIN THE SPECIFIED SURFACE CONDITION OR NOT !!
PROTECT ALL SEAL SURFACES FROM NICKS AND SCRATCHES.

REV	DWG	CHK	ZONE	DATE	CHANGES
C	PAL	RW		5-13-93	REVISED
B	RVS	RW		5-5-93	REDESIGNED FOR ELECTRON BEAM WELDING
A	RVS	RW		4-30-93	REVISED TO DATE

UNLESS OTHERWISE SPECIFIED
TOLERANCES: .X ± .1 FRAC. ± 1/64; .XX ± .03 ANGLES ± 1°; .XXX ± .005 FINISH 125√
THREADS ARE CLASS 2
CHAMFER ENDS OF ALL SCREW THREADS 30°.
CUT 1.5 PITCH THRD RELIEF WITH ROUND NOSE TOOL ON MACHINE CUT THREADS.
BREAK EDGES .016 MAX. ON MACHINED WORK
REMOVE BURRS WELD SPLATTER & LOOSE SCALE
REFERENCES: ANSI Y14.5 & B46.1.

SHOP ORDERS
ACCT. NO. | SERIAL NO.
DATE ISSD | DATE REQD. | NO. REQD.
DELIVER TO
SURFACE TREATMENT: BRIGHT DIP
IDENT. METH.: TAG
DWG. BY: R.SCHAFER DATE 4-9-93
CHK. BY: R.WOLGAST DATE

LAWRENCE BERKELEY LABORATORY
UNIVERSITY OF CALIFORNIA-BERKELEY

WIMP DETECTOR
CAN, ICE-BOX, OVC
FLANGE, STEM, ICE-BOX, OVC

PATENT CLEAR	DWG. TYPE	SHOWN ON	SCALE	DO NOT SCALE PRINTS
	C - D	22G2756	FULL	

MICROFILMED	DESIGN ACCT. NO.	CATEGORY CODE	DWG. NO.	SIZE	REV.
	7916-05		22G2774		C