UNLESS OTHERWISE NOTED			SHOP ORDERS			PATENT CLR	DWG TYPE A - D	SHOWN ON 22G2356	DWG NO 22G2781 REV A
.X ± .1	.XX ± .01	.XXX ± .005	ACCT NO	SER NO		MICROFILMED	DES ACCT NO 7916-05	CATEGORY	SCALE FULL (Do not scale prints)
ANGLES ± .1°	FINISH 125 ✓		DATE ISSD	DATE REQD	NO REQD				

THREADS ARE CLASS 2.
CHAMFER ENDS OF ALL SCREW THREADS 30°.
CUT 1.5 PITCH THRD RELIEF WITH ROUND NOSE TOOL ON MACHINE CUT THRDS.
BREAK EDGES .016 MAX ON MACHINED WORK.
REMOVE BURRS WELD SPLATTER & LOOSE SCALE.
REFERENCES: ANSI Y 14.5 & B46.1.

DEL TO	
SURFACE TREATMENT	BRIGHT DIP
IDENTIF. METHOD	TAG
DWN BY	P. LUFT — DATE 5-12-93
CHK BY	R. WOLGAST — DATE

LAWRENCE BERKELEY LABORATORY U.C. BERKELEY

WIMP DETECTOR

CAN, ICE-BOX, OVC

GUIDE, CENTERING, ICE-BOX, OVC

MATERIAL COPPER, OFE 10100, HARDNESS AS IS

REV	DWN	CHK	DATE	CHANGES
A	PL	RW RW	5-12-93	REDRAWN. .32 DIM WAS .36; .07 DIM WAS .13

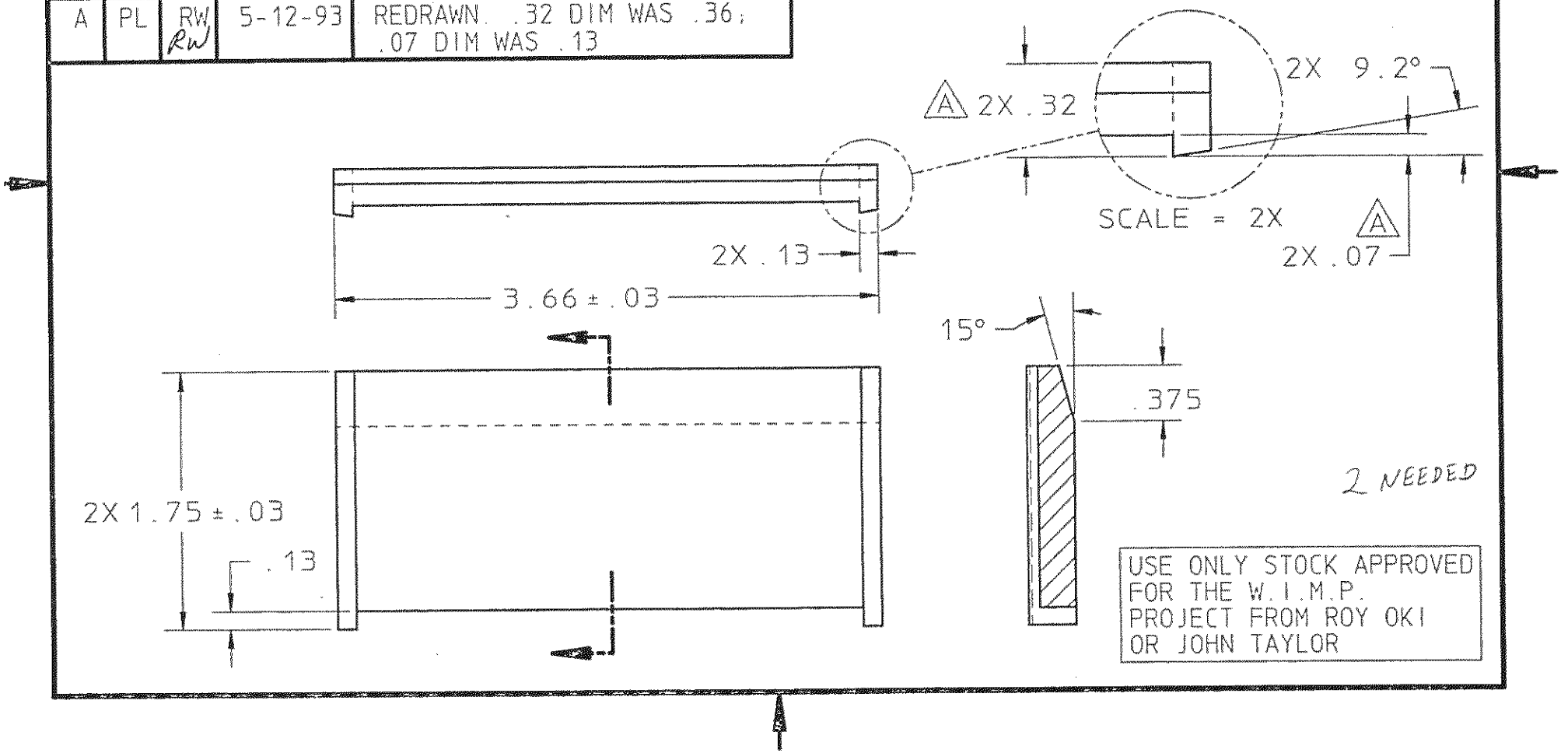

USE ONLY STOCK APPROVED FOR THE W.I.M.P. PROJECT FROM ROY OKI OR JOHN TAYLOR