REQ	ITEM	PART NUMBER	DESCRIPTION
			SHEET, COPPER, OFE 10100, HALF HARD, .125 THK

NOTES:

1. PARENT MATERIAL ELECTRON BEAM WELD ONLY. WELD TO BE VACUUM TIGHT, WITH 85-90% JOINT PENETRATION.

IMPORTANT:
USE ONLY STOCK APPROVED FOR THE WIMP DETECTOR PROJECT BY JOHN TAYLOR OR ROY OKI.

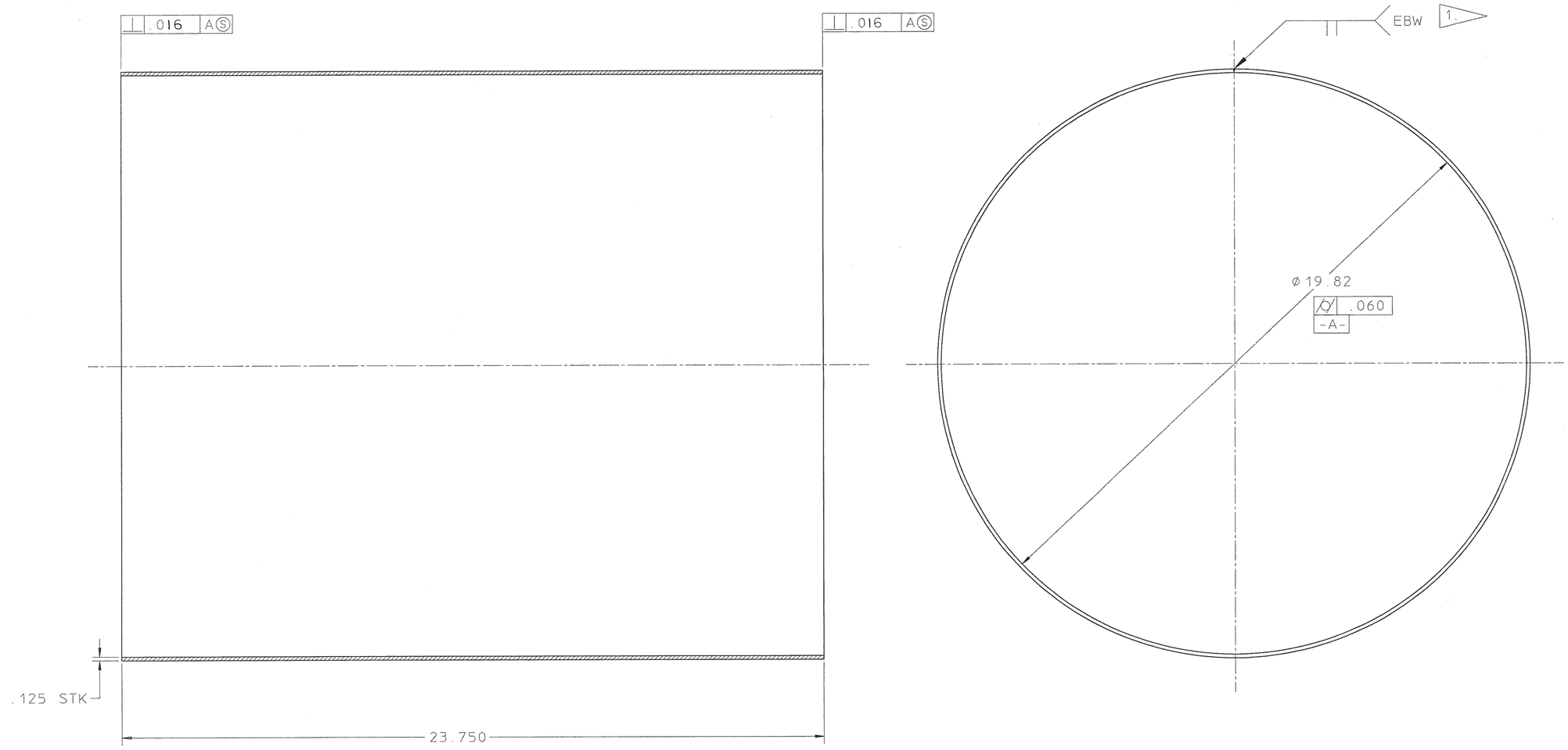

REV	DWG	CHK	ZONE	DATE	CHANGES

UNLESS OTHERWISE SPECIFIED

TOLERANCES		
.X ± .1	FRAC. ± 1/64	
.XX ± .03	ANGLES ± 1°	
.XXX ± .005	FINISH 125√	

THREADS ARE CLASS 2
CHAMFER ENDS OF ALL SCREW THREADS 30°.
CUT 1.5 PITCH THRD RELIEF WITH ROUND NOSE TOOL ON MACHINE CUT THREADS.
BREAK EDGES .016 MAX. ON MACHINED WORK
REMOVE BURRS WELD SPLATTER & LOOSE SCALE
REFERENCES: ANSI Y14.5 & B46.1.

SHOP ORDERS

ACCT. NO.		SERIAL NO.
DATE ISSD.	DATE REQD.	NO. REQD.
DELIVER TO		
SURFACE TREATMENT	BRIGHT DIP	
IDENT. METH.	TAG	
DWG. BY	P. LUFT	DATE 6-7-93
CHK. BY	R. WOLGAST RW	DATE 6-8-93

LAWRENCE BERKELEY LABORATORY
UNIVERSITY OF CALIFORNIA-BERKELEY

WIMP DETECTOR
CAN, ICE-BOX, LN
ROLL-UP, CAN, ICE-BOX, LN

PATENT CLEAR	DWG. TYPE	SHOWN ON	SCALE	DO NOT SCALE PRINTS
	C - D	22G2796	HALF	

MICROFILMED	DESIGN ACCT. NO.	CATEGORY CODE	DWG. NO.	SIZE	REV.
M	7916-05		22G2854		