NOTES:

1. MATERIALS AND HARDWARE SPECIFICATIONS ARE SUGGESTED ONLY. APPROVED SUBSTITUTIONS MAY BE MADE WHERE CONVENIENT.

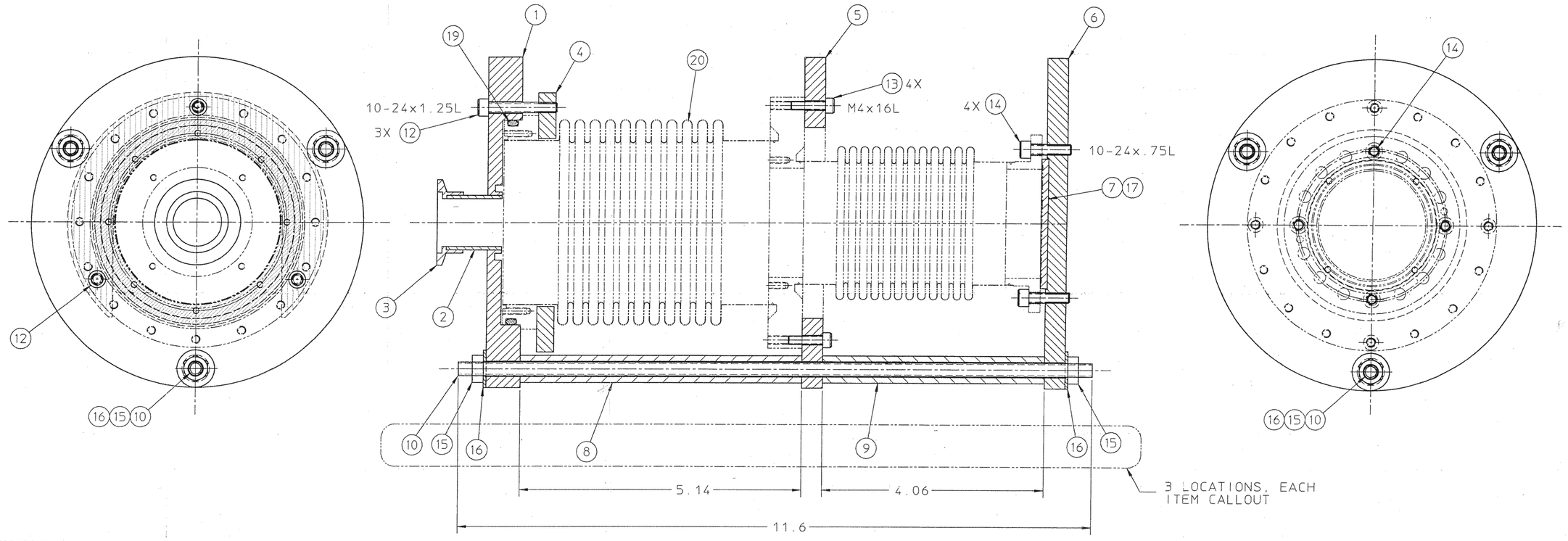

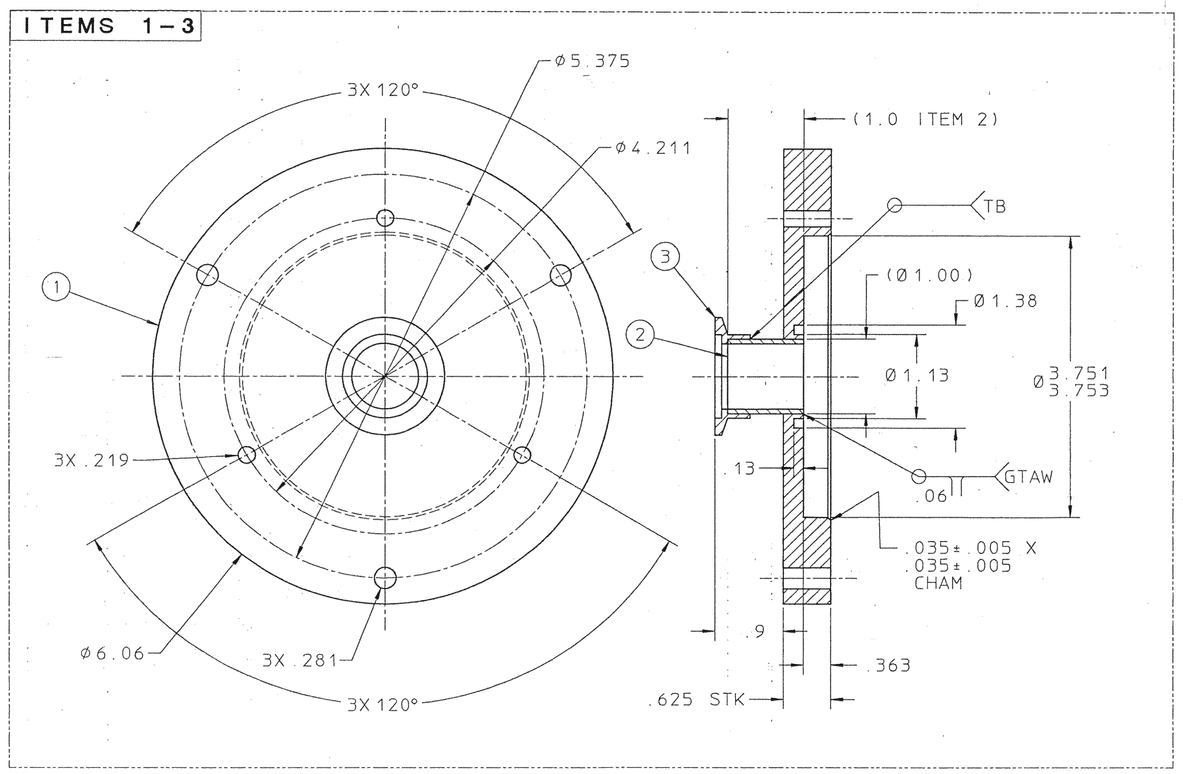

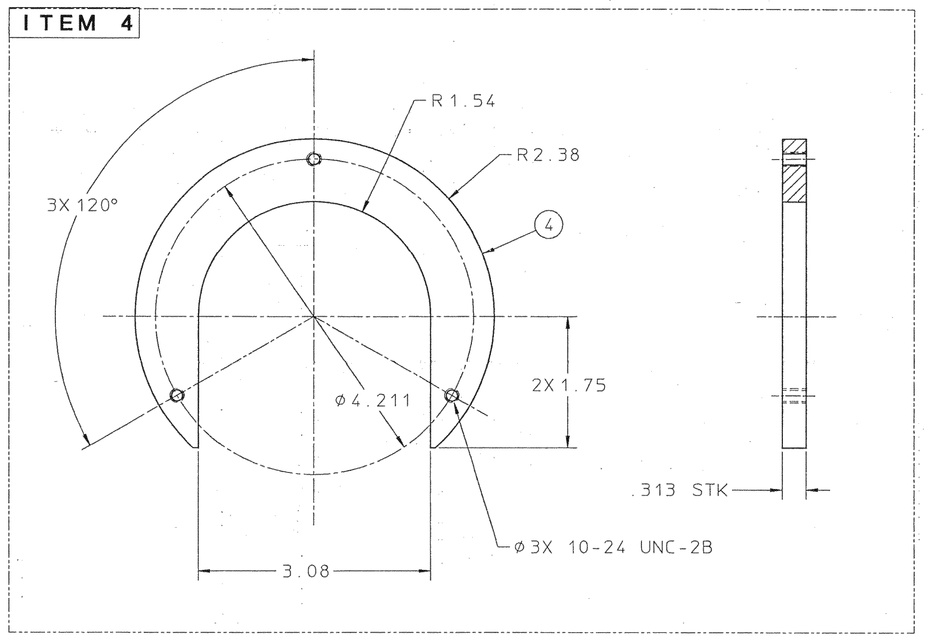

22G2876

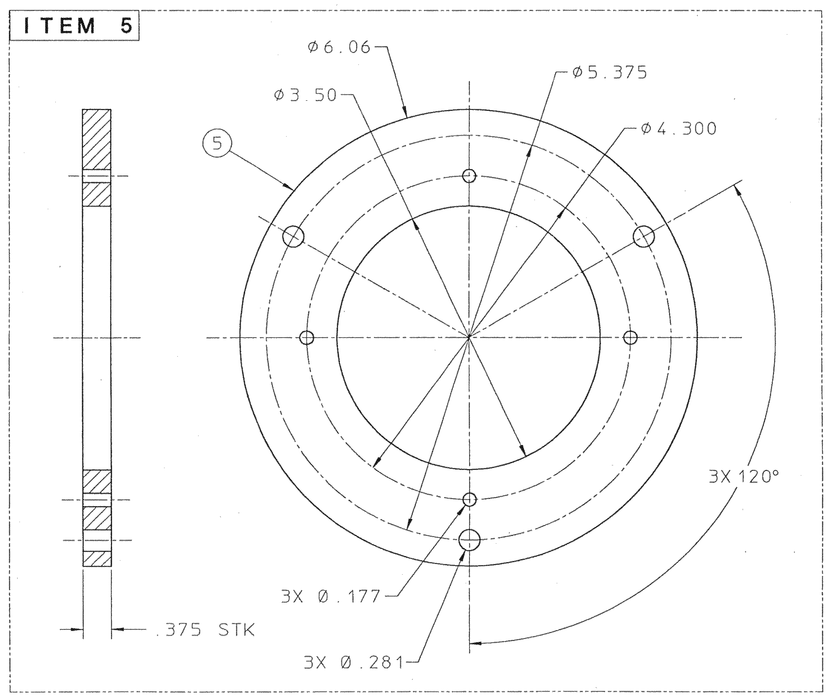

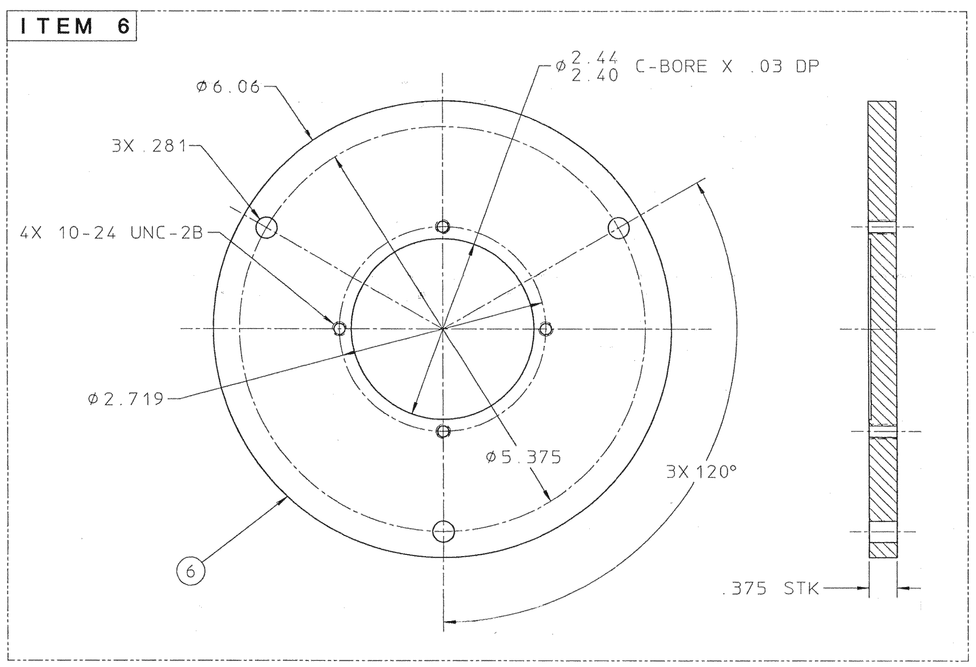

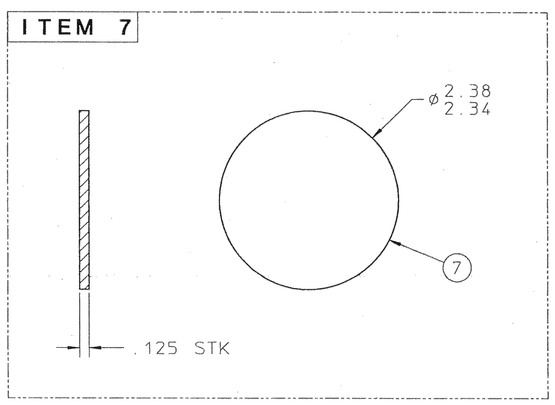

REQD	ITEM	PART NO.	DESCRIPTION
REF	20	22G3396	BRAZEMENT, NITROGEN THERMAL INTERCEPT
1	19		O-RING, BUNA-N, PARKER 2-238 OR EQL
	18		
A/R	17		EPOXY, CONTACT CEMENT, OR DOUBLE-SIDED TAPE
6	16	5310-21880	WASHER, FLAT, ROUND, 1/4 IN, CRES
6	15	5310-21832	NUT, PLAIN, HEX, 1/4-20 UNC-2B, STEEL
4	14	5305-47539	SCREW, SCH, 10-24 UNC-2A X 3/4 L, STEEL, BLACK
4	13		SCREW, SCH, M4X0.7-6g6g X 16mm L, STEEL
3	12		SCREW, SCH, 10-24 UNC-2A X 1.25 L, STEEL
	11		
(3)	10	5306-21693	ROD, THREADED, 1/4-20 UNC-2A, STEEL, 11.6 L
A/R	9	4710-14199	TUBE, CRES, 304, 1/2 OD X .109 WALL
A/R	8	4710-14199	TUBE, CRES, 304, 1/2 OD X .109 WALL
A/R	7	5330-40715	SHEET, RUBBER, NATURAL, 40 DUROMETER, 1/8 THK
A/R	6	9501-11479	PLATE, AL, 6061-T651, 3/8 THK
A/R	5	9501-11479	PLATE, AL, 6061-T651, 3/8 THK
A/R	4	9501-11478	PLATE, AL, 6061-T651, 5/16 THK
1	3		FTG, MDC K100-W KWIK-FLANGE OR EQL, CRES
A/R	2	4710-14205	TUBE, CRES, 304, 1.0 OD X .065 WALL
A/R	1	9528-10663	PLATE, CRES, 304, 5/8 THK

REV	DWG	CHK	ZONE	DATE	CHANGES

UNLESS OTHERWISE SPECIFIED
TOLERANCES: .X ± .1 — FRAC. ± 1/64; .XX ± .02 — ANGLES ± 1°; .XXX ± .005 — FINISH 125√
THREADS ARE CLASS 2
CHAMFER ENDS OF ALL SCREW THREADS 35°
CUT 1.5 PITCH THD RELIEF WITH ROUND NOSE TOOL ON MACHINE CUT THREADS.
BREAK EDGES .016 MAX. ON MACHINED WORK
REMOVE BURRS WELD SPLATTER & LOOSE SCALE
REFERENCES: ANSI Y14.5 & B46.1.

SHOP ORDERS
ACCT. NO. | SERIAL NO.
DATE ISSD | DATE REQD. | NO. REQD.
DELIVER TO
SURFACE TREATMENT: DEGREASE
IDENT. METH.: TAG
DWG. BY: P. LUFT | DATE: 10-27-93
CHK. BY: J. TAYLOR | DATE: 11-2-93

LAWRENCE BERKELEY LABORATORY
UNIVERSITY OF CALIFORNIA-BERKELEY

WIMP DETECTOR
E-STEM ASSY
LEAK-CHECK FIXTURE, NTI BRAZEMENT

PATENT CLEAR	DWG. TYPE	SHOWN ON	SCALE	DO NOT SCALE PRINTS
	C - D	22G3536	FULL	

MICROFILMED	DESIGN ACCT. NO.	CATEGORY CODE	DWG. NO.	SIZE	REV.
	7916-05		22G2876		