REQ	ITEM	PART NUMBER	DESCRIPTION
			COPPER, OFE 10100

NOTES:

1. FUTURE CUTOUT SHOWN FOR REFERENCE PURPOSES ONLY. NOT FOR FABRICATION AT THIS REVISION LEVEL.

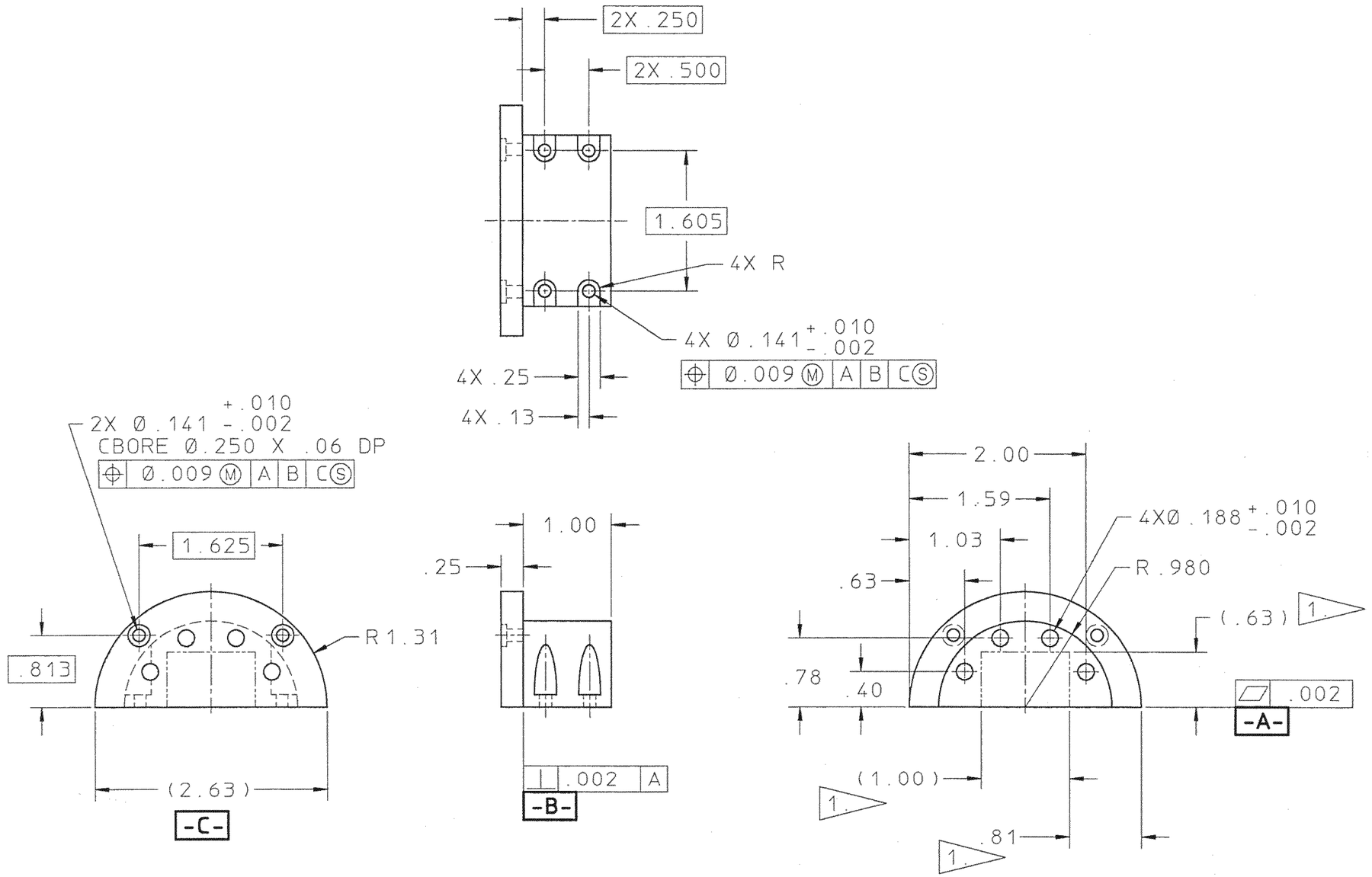

22G3273

REV	DWG	CHK	ZONE	DATE	CHANGES

UNLESS OTHERWISE SPECIFIED

TOLERANCES		
.X ± .1	FRAC. ±1/64	
.XX ± .02	ANGLES ±1°	
.XXX ± .005	FINISH 125	

THREADS ARE CLASS 2
CHAMFER ENDS OF ALL SCREW THREADS 30°.
CUT 1.5 PITCH THRD RELIEF WITH ROUND NOSE TOOL ON MACHINE CUT THREADS.
BREAK EDGES .016 MAX. ON MACHINED WORK
REMOVE BURRS WELD SPLATTER & LOOSE SCALE
REFERENCES: ANSI Y14.5 & B46.1.

SHOP ORDERS

ACCT. NO.		SERIAL NO.	
DATE ISSD	DATE REQD.	NO. REQD.	
DELIVER TO			
SURFACE TREATMENT	BRIGHT DIP		
IDENT. METH.	TAG		
DWG. BY	P. LUFT P.L.	DATE	4-20-93
CHK. BY	J. TAYLOR J.T.	DATE	10-14-93

LAWRENCE BERKELEY LABORATORY
UNIVERSITY OF CALIFORNIA-BERKELEY

WIMP DETECTOR
E-STEM ASSY
HALF 'A', NITROGEN THERMAL INTERCEPT, E-STEM

PATENT CLEAR	DWG. TYPE	SHOWN ON	SCALE	DO NOT SCALE PRINTS
BC	C - D	22G3536	FULL	
MICROFILMED	DESIGN ACCT. NO.	CATEGORY CODE	DWG. NO.	SIZE / REV.
M	7916-05		22G3273	