REQ	ITEM	PART NUMBER	DESCRIPTION
A/R	1	9528-10661	CRES, 304
1	2		FLANGE, ISO O-RING, MDC KWIK-FLANGE K100-W OR EQL
A/R	3	4710-14204	TUBE, CRES, 304, 1 IN OD X .049 WALL (3/4 L)

NOTES:

1. WELDS TO BE VACUUM TIGHT.
2. INDICATED DIMENSIONS ARE FOR OPTIONAL WELD PREP TO OBTAIN VACUUM TIGHTNESS PER NOTE 1.

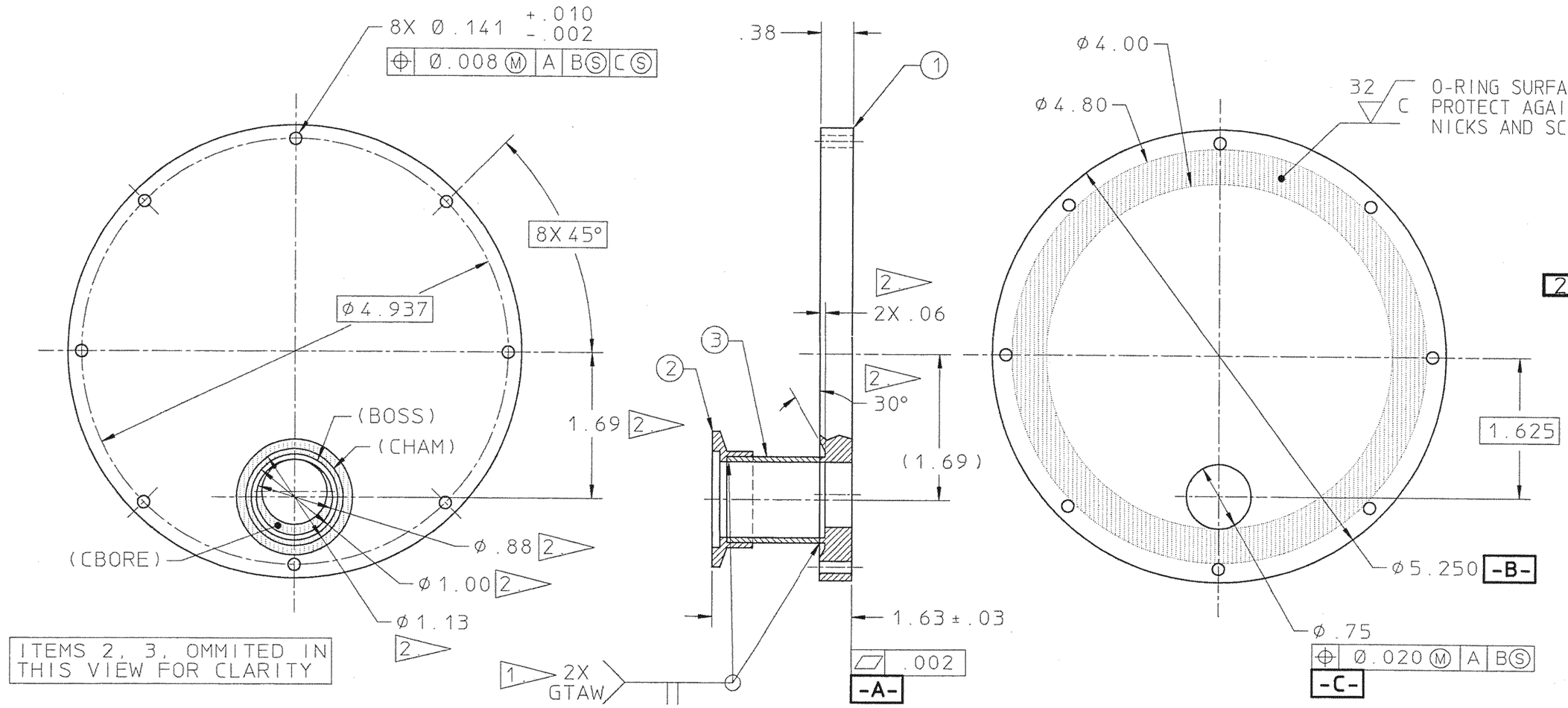

22G3283

REV	DWG	CHK	ZONE	DATE	CHANGES

UNLESS OTHERWISE SPECIFIED

TOLERANCES			
	.X ± .1	FRAC. ±1/64	
	.XX ± .02	ANGLES ±1°	
	.XXX ± .005	FINISH 125√	

THREADS ARE CLASS 2
CHAMFER ENDS OF ALL SCREW THREADS 30°.
CUT 1.5 PITCH THRD RELIEF WITH ROUND NOSE TOOL ON MACHINE CUT THREADS.
BREAK EDGES .016 MAX. ON MACHINED WORK
REMOVE BURRS WELD SPLATTER & LOOSE SCALE
REFERENCES: ANSI Y14.5 & B46.1.

SHOP ORDERS

ACCT. NO.	SERIAL NO.	
DATE ISSD	DATE REQD.	NO. REQD.
DELIVER TO		
SURFACE TREATMENT	DEGREASE	
IDENT. METH.	TAG	
DWG. BY	P. LUFT P.L.	DATE 4-23-93
CHK. BY	J. TAYLOR J.T.	DATE 10-15-93

LAWRENCE BERKELEY LABORATORY
UNIVERSITY OF CALIFORNIA-BERKELEY

WIMP DETECTOR
E-STEM ASSY
FLANGE, BLANK-OFF, E-STEM

PATENT CLEAR	DWG. TYPE	SHOWN ON	SCALE	DO NOT SCALE PRINTS
	C - D	22G3536	FULL	
MICROFILMED	DESIGN ACCT. NO.	CATEGORY CODE	DWG. NO.	SIZE / REV.
	7916-05		22G3283	