NOTES:

1. ELECTRON BEAM WELD - COMPLETE JOINT PENETRATION.
2. MATCH WELD PREP OF ITEMS 1 AND 2 PER DETAIL E.
3. WELDMENT TO BE VACUUM TIGHT.
4. GOLD PLATE OUTSIDE SURFACES. MASK OFF ALL EXTERNAL AND INTERNAL THREADS. ALSO MASK OFF NOSE SEAL, EACH END.

REQ	ITEM	PART NUMBER	DESCRIPTION
A/R	1		TUBE, COPPER, OFE 10100, 2.50 OD X .25 WALL
A/R	2		PLATE, COPPER, OFE 10100

USE ONLY APPROVED RADIO-PURE MATERIAL

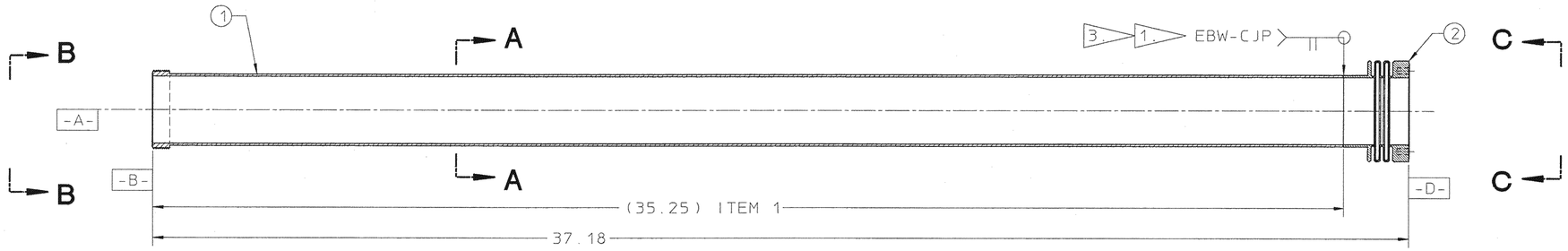

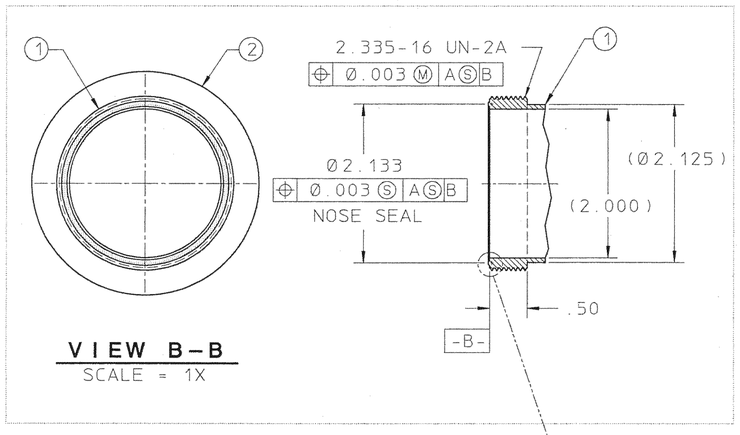

VIEW B-B
SCALE = 1X

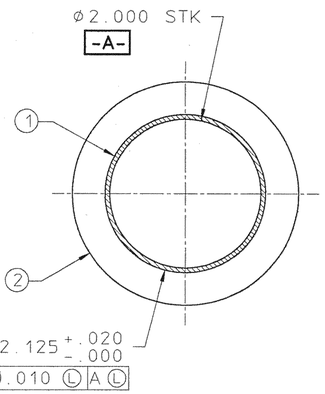

SECTION A-A
SCALE = 1X

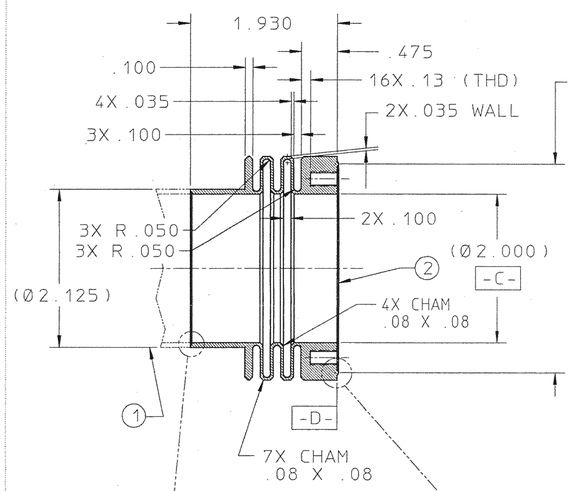

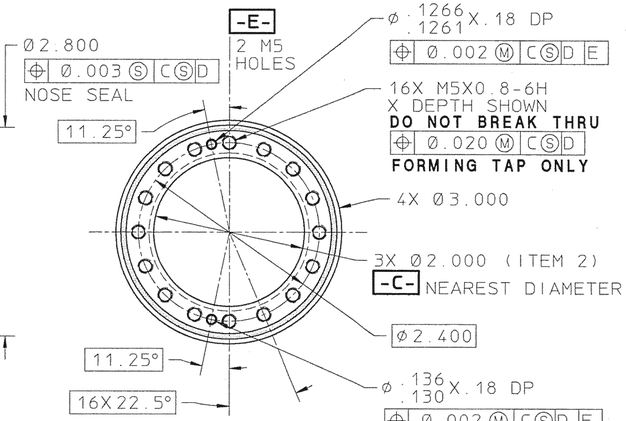

VIEW C-C
SCALE = 1X

22G3304

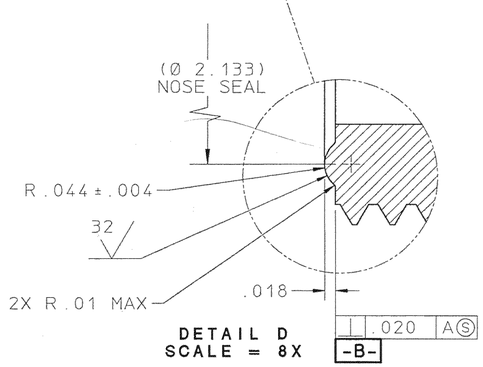

DETAIL D
SCALE = 8X

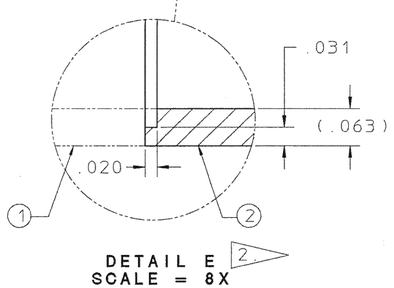

DETAIL E 2
SCALE = 8X

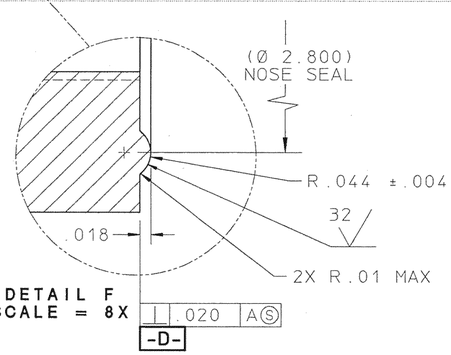

DETAIL F
SCALE = 8X

REV	DWG	CHK	ZONE	DATE	CHANGES

UNLESS OTHERWISE SPECIFIED

TOLERANCES		
	.X ± .1	FRAC. ±1/64
	.XX ± .02	ANGLES ± 1°
	.XXX ± .005	FINISH 125

THREADS ARE CLASS 2
CHAMFER ENDS OF ALL SCREW THREADS 30°.
CUT 1.5 PITCH THRD RELIEF WITH ROUND NOSE TOOL ON MACHINE CUT THREADS.
BREAK EDGES .016 MAX. ON MACHINED WORK
REMOVE BURRS WELD SPLATTER & LOOSE SCALE
REFERENCES: ANSI Y14.5 & B46.1.

SHOP ORDERS

ACCT. NO.		SERIAL NO.	
DATE ISSD.	DATE REQD.	NO. REQD.	
DELIVER TO			
SURFACE TREATMENT	BRIGHT DIP		
IDENT. METH.	TAG		
DWG. BY	P. LUFT P.L.	DATE	9-30-93
CHK. BY	J. TAYLOR J.T.	DATE	10-14-93

LAWRENCE BERKELEY LABORATORY
UNIVERSITY OF CALIFORNIA-BERKELEY

WIMP DETECTOR
E-STEM ASSY
E-STEM, LHe

PATENT CLEAR	DWG. TYPE	SHOWN ON	SCALE	DO NOT SCALE PRINTS
DC	C - D	22G3536	HALF	
MICROFILMED	DESIGN ACCT. NO.	CATEGORY CODE	DWG. NO.	SIZE / REV.
	7916-05		22G3304	