NOTES:

1. MATCH WELD PREP OF ALL ITEMS MATING WITH ROLL-UP, ITEM 1, TO AS-BUILT DIMENSIONS OF SAME.
2. THERE SHALL BE NO SCRATCHES OR SCRIBE LINES OF ANY KIND ACROSS ANY SEAL SURFACE WHETHER THE DISFIGUREMENT IS WITHIN THE SPECIFIED SURFACE CONDITION OR NOT !! PROTECT ALL SEAL SURFACES FROM NICKS AND SCRATCHES.
3. VESSEL TO BE VACUUM TIGHT WITH FLANGES BLANKED OFF.
4. STAINLESS STEEL SCREWS MAY BE TEMPORARILY SUB-STITUTED FOR ITEMS 6 FOR FABRICATION PURPOSES.
5. **FLANGES, ITEMS 2 & 3, WILL BE 180° APART RATHER THAN 20° AS DEPICTED. THEIR ELEVATIONS ARE NOT CHANGED.**

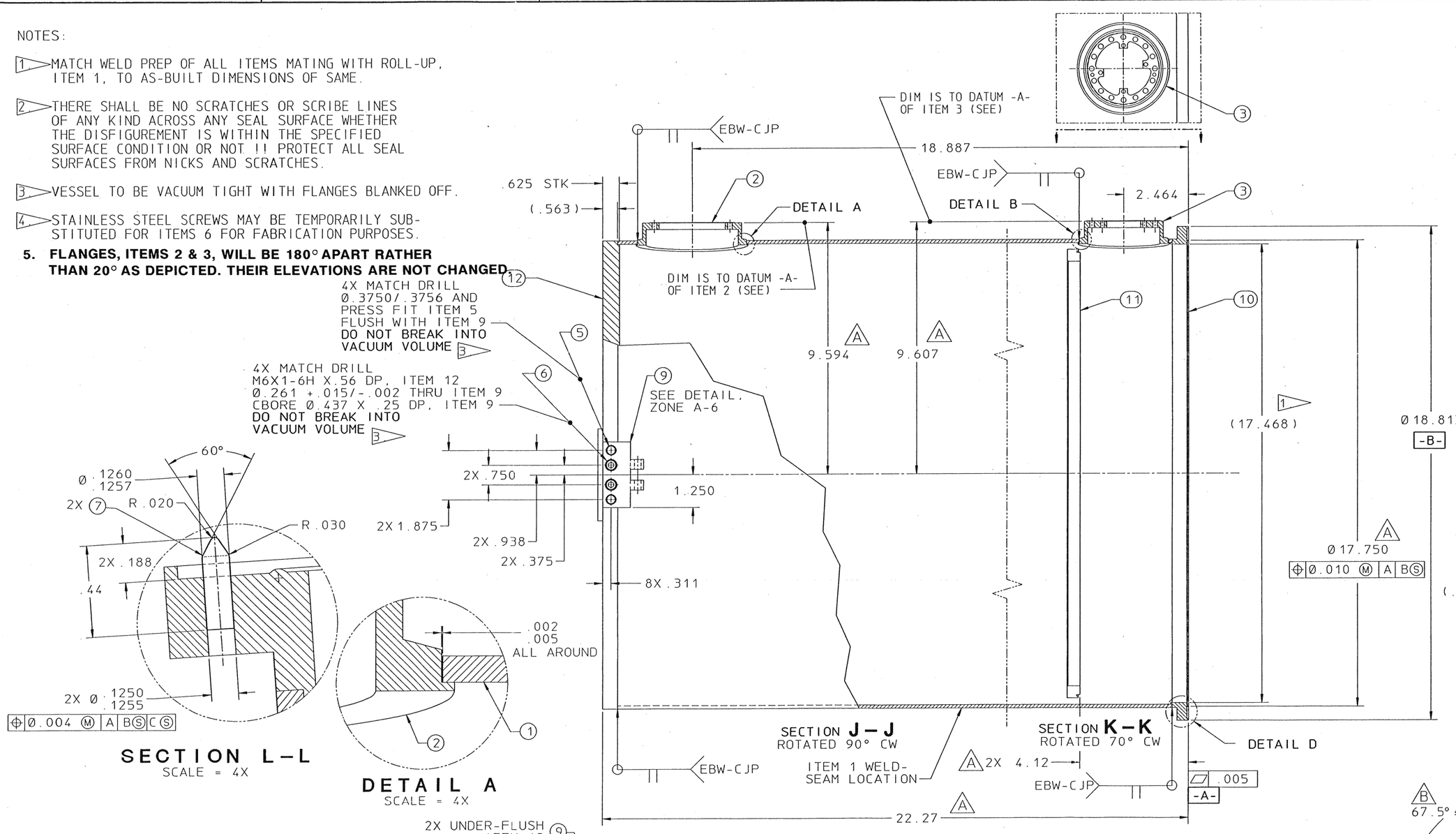

SECTION L-L
SCALE = 4X

DETAIL A
SCALE = 4X

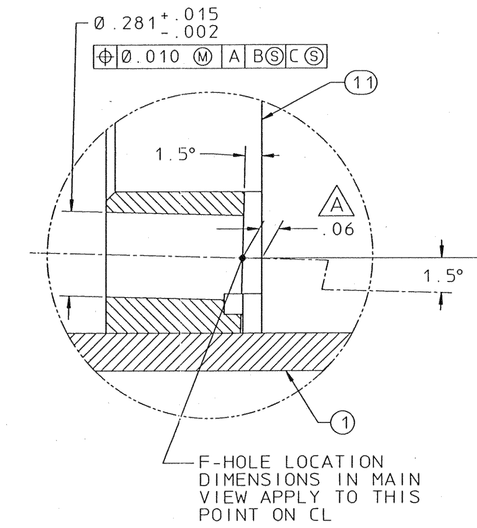

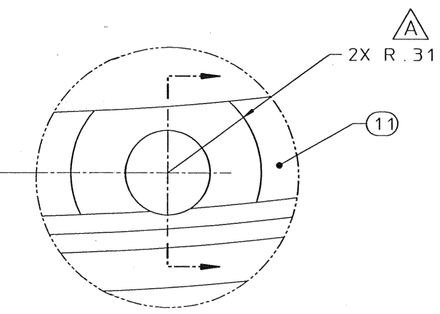

DETAIL C
4 PLACES AT F
SCALE = 4X

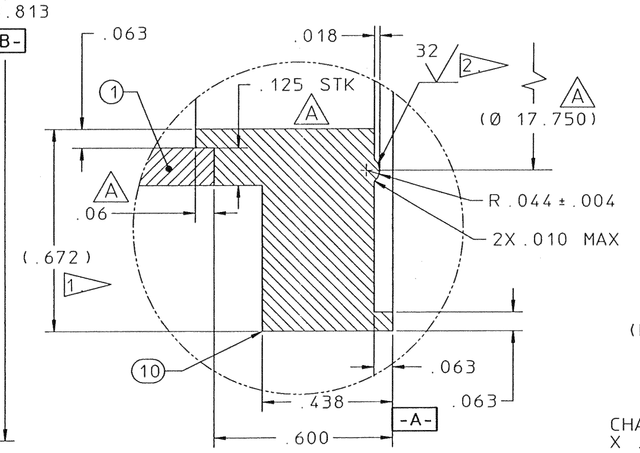

DETAIL D
SCALE = 4X

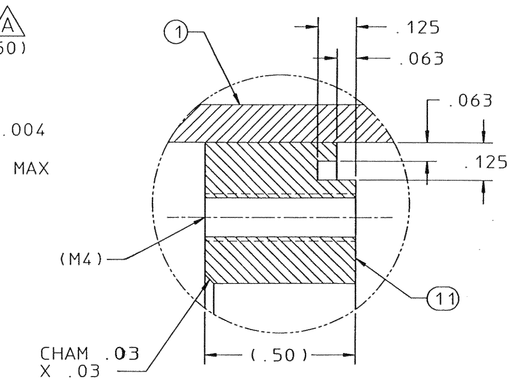

DETAIL E
SCALE = 4X

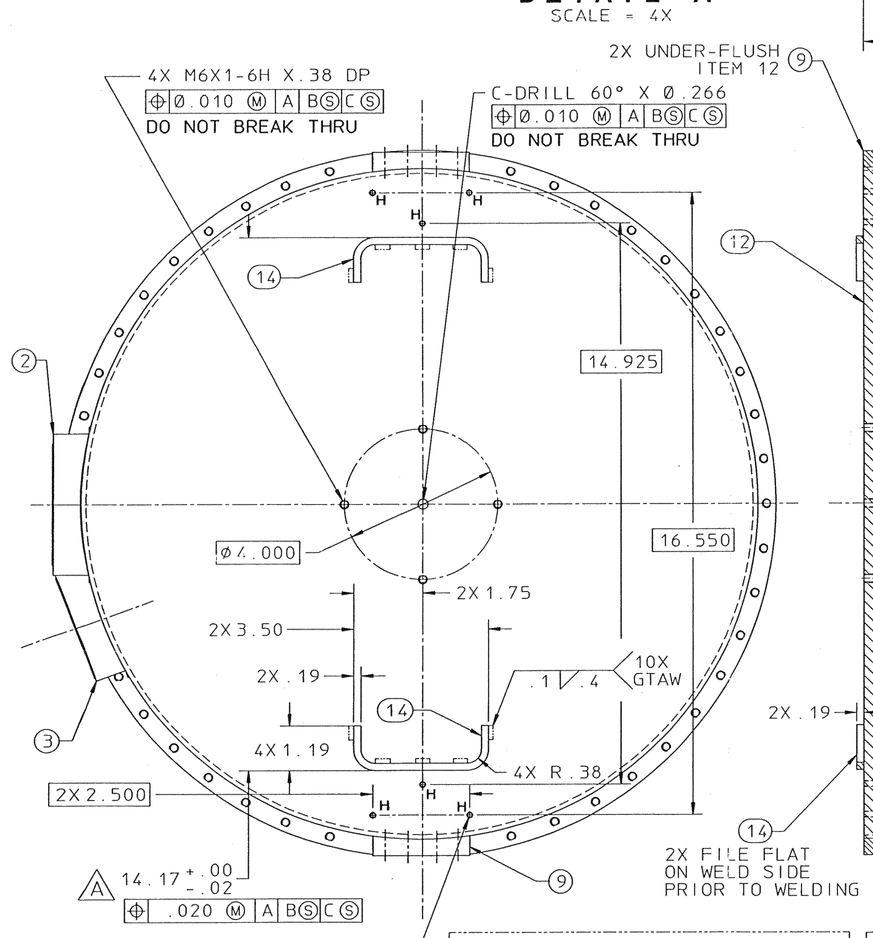

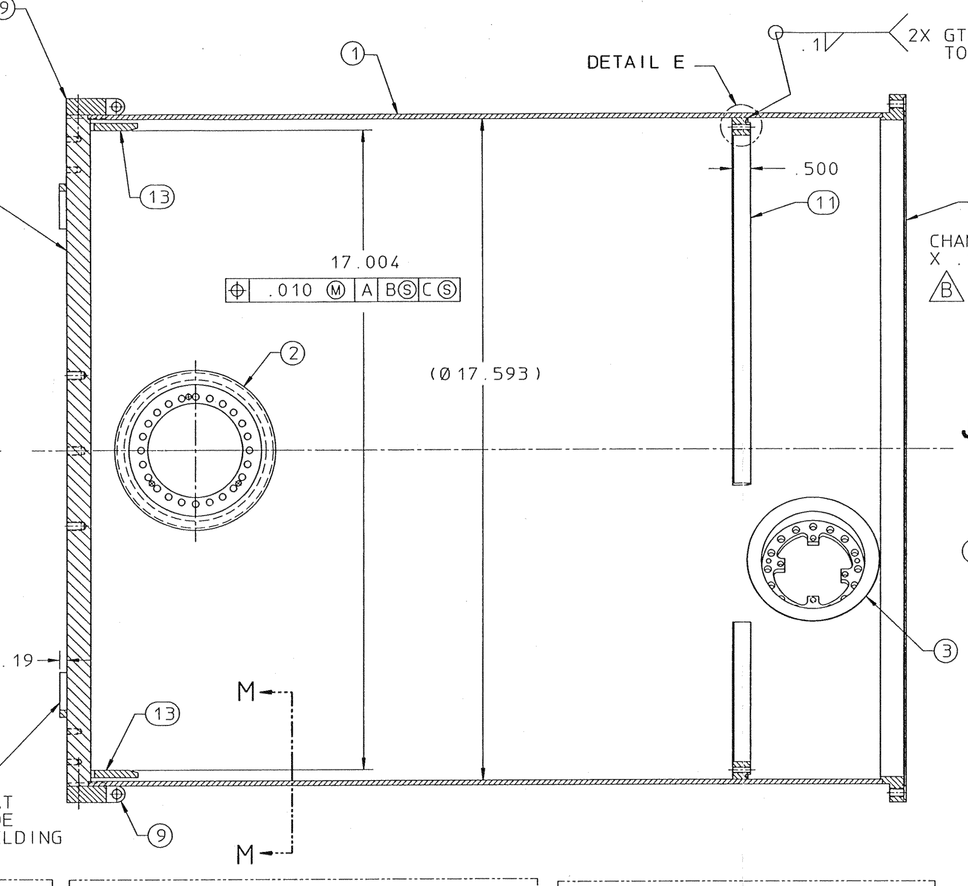

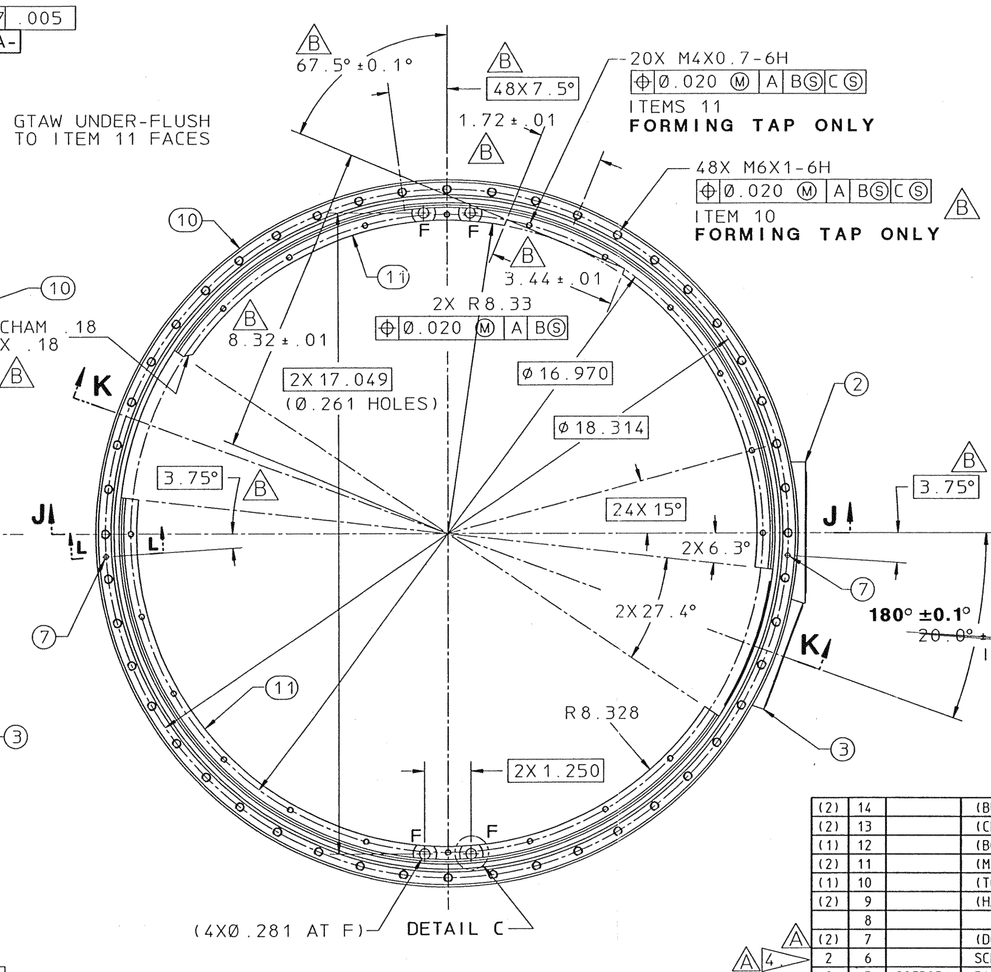

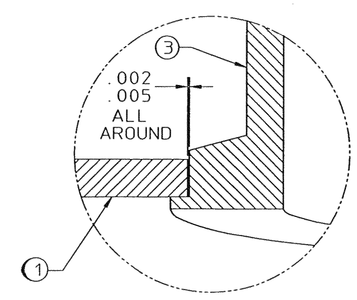

DETAIL B
SCALE = 4X

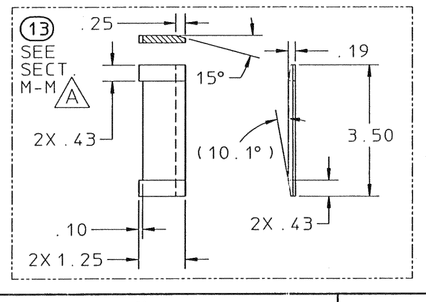

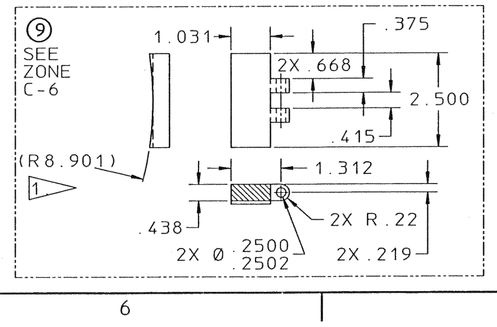

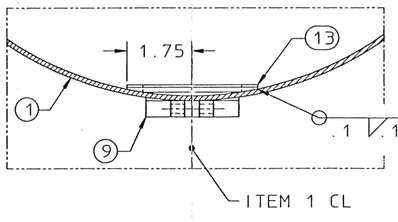

SECTION M-M
SEE DETAILS, ZONES A-6, A-7

IMPORTANT:
USE ONLY STOCK APPROVED FOR THE WIMP DETECTOR PROJECT BY JOHN TAYLOR OR ROY OKI.

REV	DWG	CHK	ZONE	DATE	CHANGES
B	PL	RR		8-19-93	3.75° DIM WAS 7.5°. 2 PL. 48X M6 TAPPED HOLE WAS 24X. ADDED NOTCH AT 8.32, 3.44, 1.72, 67.5° DIMS. ADDED .18 X .18 CHAM.
A	PL	JT		7-21-93	ADDED 9.594, 9.607 DIMS. 17.750 DIM WAS 17.938. .06, 4.12, 22.27 DIMS WERE 3 PL. 14.17+.00-.02 DIM WAS 14.172 BASIC. ITEM 13 DETAIL DIMS WERE 3PL. 20.0°±0.1° WAS 20.0°. ITEM 6 MATL BRASS WAS COPPER. .125 STK DIM WAS .125. ITEM 7 MATL COPPER WAS BRASS. R.31 C-BORE WAS SLOT.

UNLESS OTHERWISE SPECIFIED
TOLERANCES: .X ± .1; .XX ± .03; .XXX ± .005; FRAC. ±1/64; ANGLES ± 1°; FINISH 125
THREADS ARE CLASS 2
CHAMFER ENDS OF ALL SCREW THREADS 30°
CUT 1.5 PITCH THRD RELIEF WITH ROUND NOSE TOOL ON MACHINE CUT THREADS.
BREAK EDGES .016 MAX. ON MACHINED WORK
REMOVE BURRS WELD SPLATTER & LOOSE SCALE
REFERENCES: ANSI Y14.5 & B46.1

SHOP ORDERS
ACCT. NO. | SERIAL NO.
DATE ISSD | DATE REQD | NO. REQD
DELIVER TO
SURFACE TREATMENT: BRIGHT DIP
IDENT. METH.: TAG
DWG BY: P. LUFT — DATE 6-11-93
CHK BY: R. WOLGAST — DATE 6-24-93

REQD	ITEM	PART NO.	DESCRIPTION
(2)	14		(BUMPER BACKUP) PLATE, COPPER, OFE 10100, HALF HARD
(2)	13		(CENTERING GUIDE) PLATE, COPPER, OFE 10100, HALF HARD
(1)	12		(BOTTOM PLATE) PLATE, COPPER, OFE 10100, HALF HARD
(2)	11		(MID FLANGE) PLATE, COPPER, OFE 10100, HALF HARD
(1)	10		(TOP FLANGE) PLATE, COPPER, OFE 10100, HALF HARD
(2)	9		(HANGER SUPPORT) PLATE, COPPER, OFE 10100, HALF HARD
	8		
(2)	7		(DOWEL PIN) COPPER, FULL HARD
2	6		SCREW, SCH, M6X1-4g6g X 14mm L, BRASS
2	5	22G3851	PIN, SUPPORT, HANGER, LOWER, ICE-BOX
	4		
1	3	22G3894	FLANGE, E-STEM, ICE-BOX,LHe
1	2	22G3884	FLANGE, F-STEM, ICE-BOX,LHe
1	1	22G2864	ROLL-UP, CAN, ICE-BOX, LHe

LAWRENCE BERKELEY LABORATORY
UNIVERSITY OF CALIFORNIA-BERKELEY
WIMP DETECTOR
ICE-BOX PAIL ASSY
CAN, ICE-BOX, LHe

PATENT CLEAR | DWG. TYPE C-D | SHOWN ON 22G3626 | SCALE HALF | DO NOT SCALE PRINTS
MICROFILMED | DESIGN ACCT. NO 7916-05 | CATEGORY CODE | DWG. NO 22G3316 | SIZE E | REV

22G3316