| REQ | ITEM | PART NUMBER | DESCRIPTION |
|---|---|---|---|
| 1 | 1 | 22G3363-1 | RING, SPIDER-SUPPORT, E-STEM (LHe OUTER) |
| 1 | 2 | 22G3363-2 | RING, SPIDER-SUPPORT, E-STEM (LHe INNER) |
| 8 | 3 | | SCREW, RND HD, 4-40 UNC-2A X 1/8 L, NYLON |
| 4 | 4 | | STRAND, KEVLAR FIBER, .015 DIA |
| A/R | 5 | | EPOXY, VERSAMID 140 + SHELL EPON RESIN 826 |
| REF | 6 | | (TOOLING) AL PLATE, 3/4 THK |

NOTES:

1. FABRICATE SPACERS, ITEMS 6, TO OBTAIN .001/.002 RADIAL CLEARANCE WITH RINGS, ITEMS 1,2, AS SHOWN.
2. INSERT SPACERS SO AS TO CENTER RINGS AS SHOWN.
3. TIE LOOPS OF KEVLAR STRANDS AS SHOWN IN VIEW B-B, BUT DO NOT TRIM LOOP ENDS YET.
4. LOAD LOOPS TO 20-LB TENSION EACH TO TAKE OUT SLACK. ASSEMBLY MAY BE HUNG IN A HORIZONTAL POSITION WITH WEIGHTS ATTACHED TO THE LOOP ENDS ON THE UNDER SIDE, AND LOOP ENDS ON THE UPPER SIDE ATTACHED TO A COMMON HOOK.
5. IMPORTANT!! UNLOAD KEVLAR LOOPS, ITEMS 4, WHILE APPLYING EPOXY, ITEM 5 TO TIE AREA SHOWN IN VIEW B-B. THIS ALLOWS THE EPOXY TO WICK INTO THE INTERNAL FIBERS OF THE STRANDS. LOAD BEARING FAILURE OF THE ASSEMBLY MAY OCCUR IF THIS STEP IS OMITTED. MINIMIZE EPOXY SPREAD PAST TIE AREA.
6. AFTER EPOXY HAD BEEN APPLIED, RE-LOAD LOOPS TO 20-LB TENSION AND ALLOW TO DRY.
7. UNLOAD AFTER DRYING, REMOVE SPACERS, AND TRIM LOOP ENDS AS SHOWN IN VIEW B-B. FINALLY, INSTALL SCREWS, ITEMS 3, AS SHOWN.

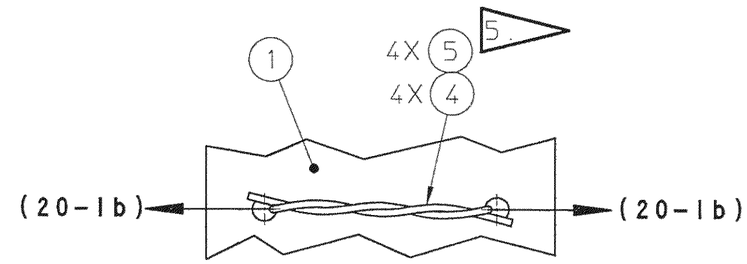


VIEW B-B
SCALE = 4X

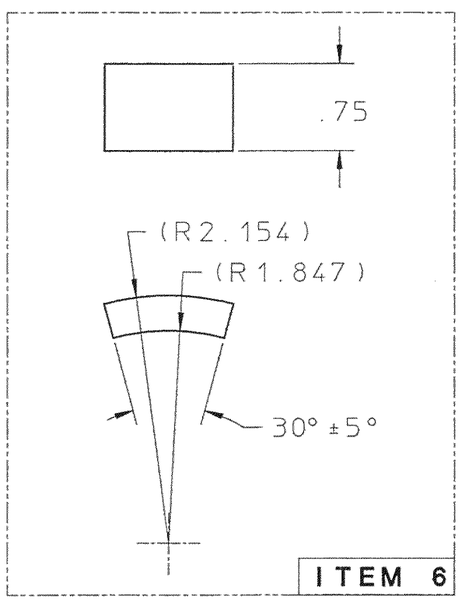


ITEM 6

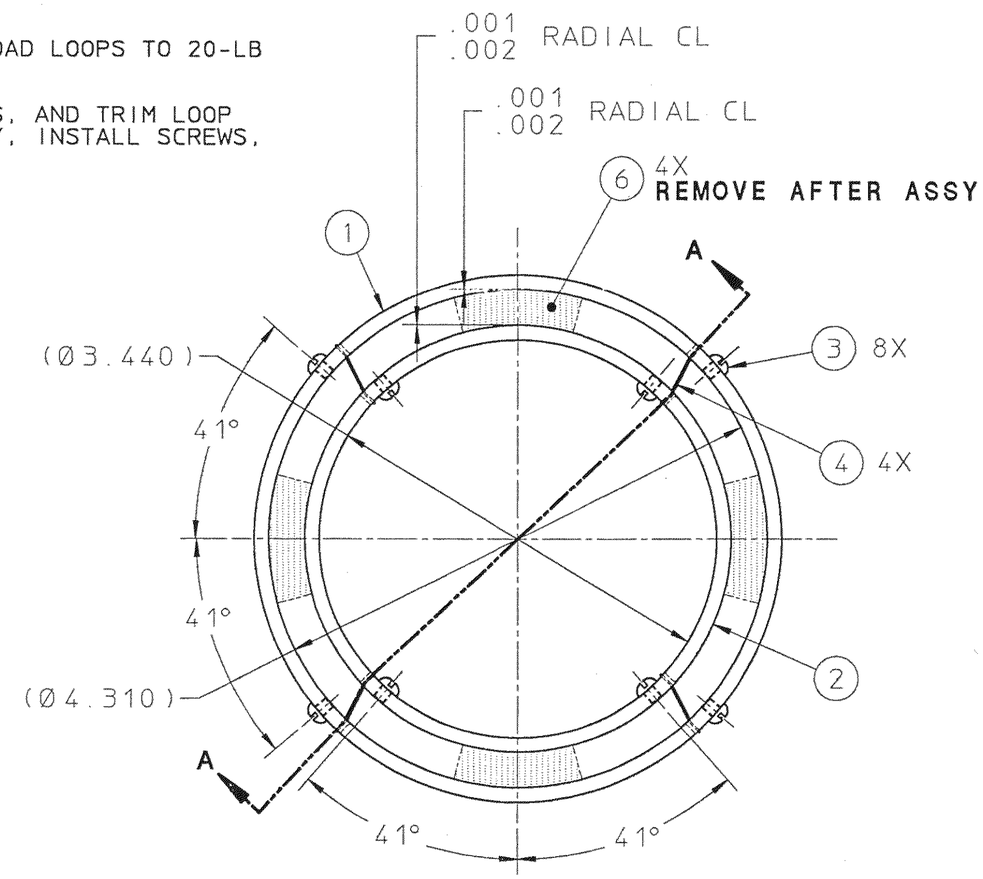


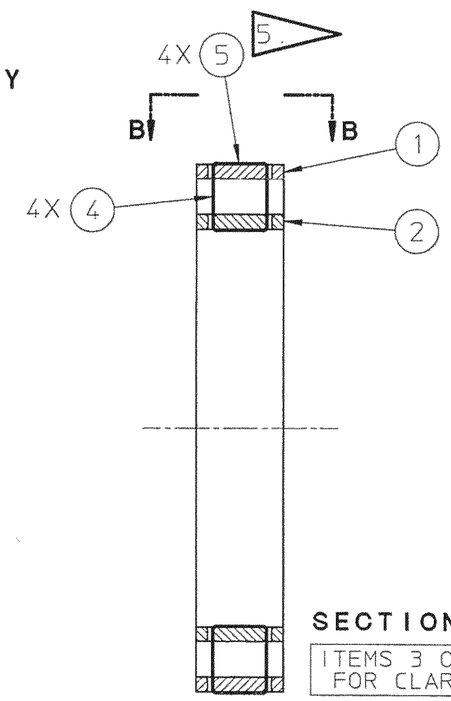


SECTION A-A

ITEMS 3 OMITTED FOR CLARITY

22G3353

| REV | DWG | CHK | ZONE | DATE | CHANGES |
|---|---|---|---|---|---|

UNLESS OTHERWISE SPECIFIED

| TOLERANCES | | |
|---|---|---|
| .X ± .1 | FRAC. ±1/64 | |
| .XX ± .02 | ANGLES ±1° | |
| .XXX ± .005 | FINISH 125 | |

THREADS ARE CLASS 2
CHAMFER ENDS OF ALL SCREW THREADS 30°.
CUT 1.5 PITCH THRD RELIEF WITH ROUND NOSE TOOL ON MACHINE CUT THREADS.
BREAK EDGES .016 MAX. ON MACHINED WORK
REMOVE BURRS WELD SPLATTER & LOOSE SCALE
REFERENCES: ANSI Y14.5 & B46.1.

SHOP ORDERS

| | | | |
|---|---|---|---|
| ACCT. NO. | | SERIAL NO. | |
| DATE ISSD | DATE REQD. | NO. REQD. | |
| DELIVER TO | | | |
| SURFACE TREATMENT | DEGREASE | | |
| IDENT. METH. | TAG | | |
| DWG. BY | P. LUFT P.L. | DATE | 11-9-93 |
| CHK. BY | J. TAYLOR J.T. | DATE | 11-10-93 |

**LAWRENCE BERKELEY LABORATORY**
UNIVERSITY OF CALIFORNIA-BERKELEY

WIMP DETECTOR
E-STEM ASSY
SPIDER-SUPPORT ASSY, E-STEM, LHe

| PATENT CLEAR | DWG. TYPE | SHOWN ON | SCALE | DO NOT SCALE PRINTS |
|---|---|---|---|---|
| | C - A | 22G3536 | FULL | |
| MICROFILMED | DESIGN ACCT. NO. | CATEGORY CODE | DWG. NO. | SIZE / REV. |
| | 7916-05 | | 22G3353 | |