NOTES:

1. ALL WELDS AND BRAZING TO BE VACUUM TIGHT. VACUUM TEST USING LEAK-CHECK FIXTURE, ITEM 7.
2. MATCH DIAMETERS OF FLANGES, ITEMS 1,2,3, TO MATING DIAMETERS OF FORMED BELLOWS, ITEMS 4,5, AS SHOWN. TRIM ENDS OF BELLOWS AS REQUIRED.
3. PROTECT INDICATED SEAL SURFACES FROM SCRATCHES.
4. AFTER ASSY, GOLD PLATE ALL OUTSIDE SURFACES, EXCEPT: MASK OFF NOSE SEAL AND ALL TAPPED HOLES.
5. ALL GTAW (TIG) WELDS TO BE MADE WITH ZIRCONIATED WELD TIPS, NOT THORIATED.
6. INDICATED O-RING DIMENSIONS ARE TO THEORETICAL SHARP CORNERS. O-RING GROOVE FOR PARKER SIZE 2-238 OR EQL.

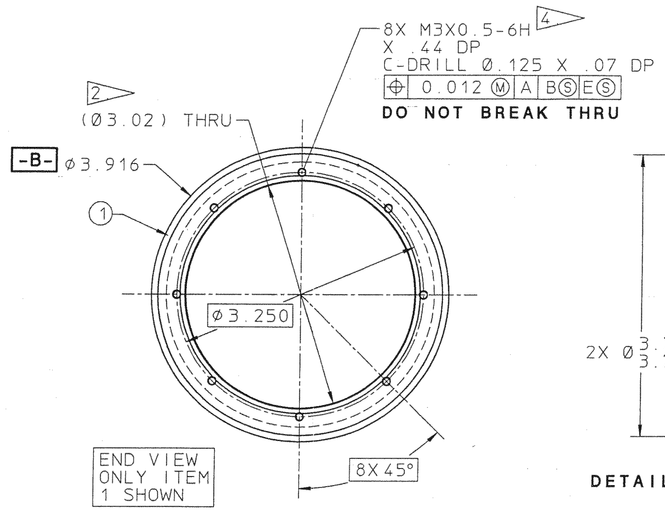

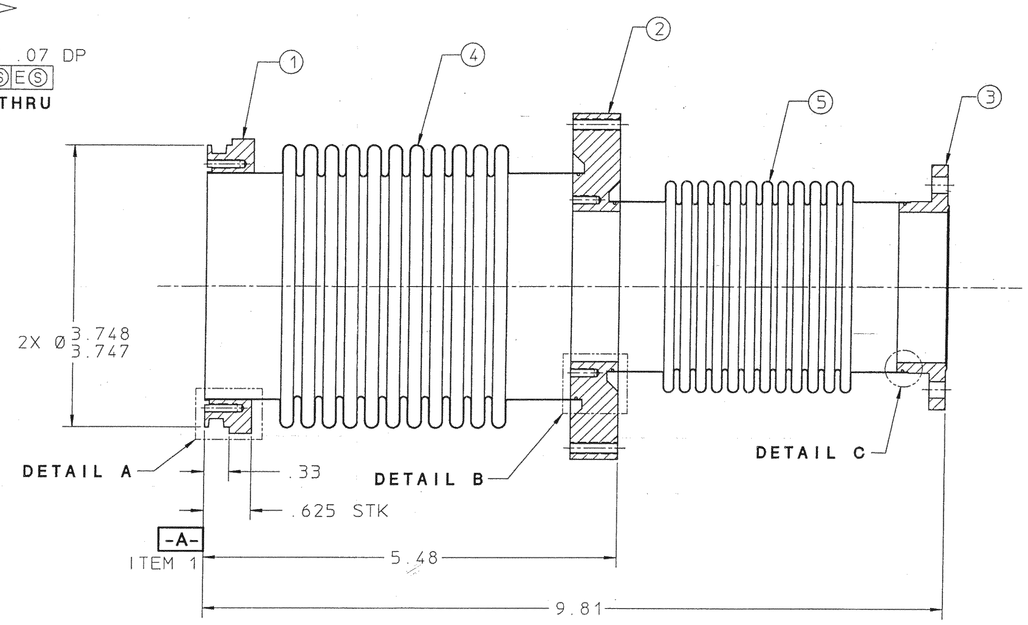

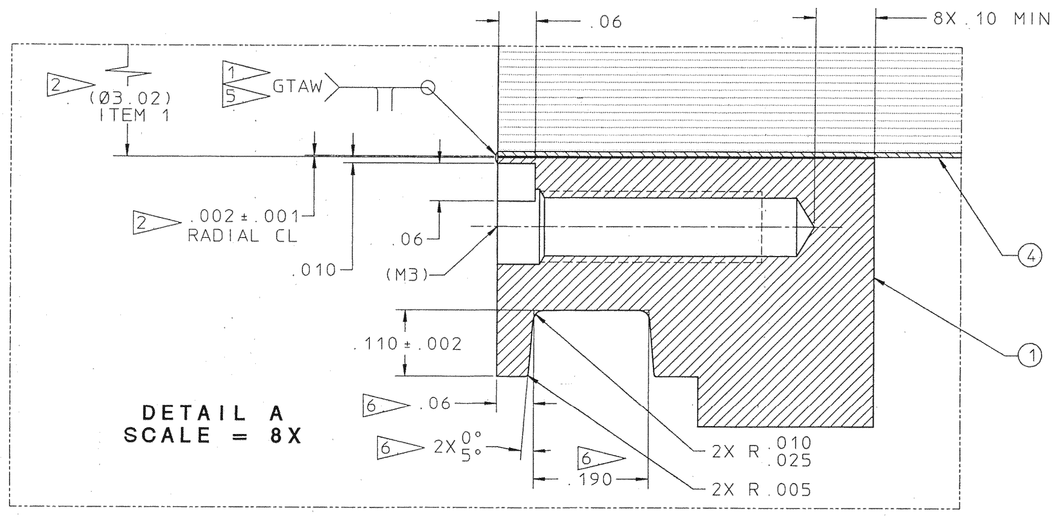

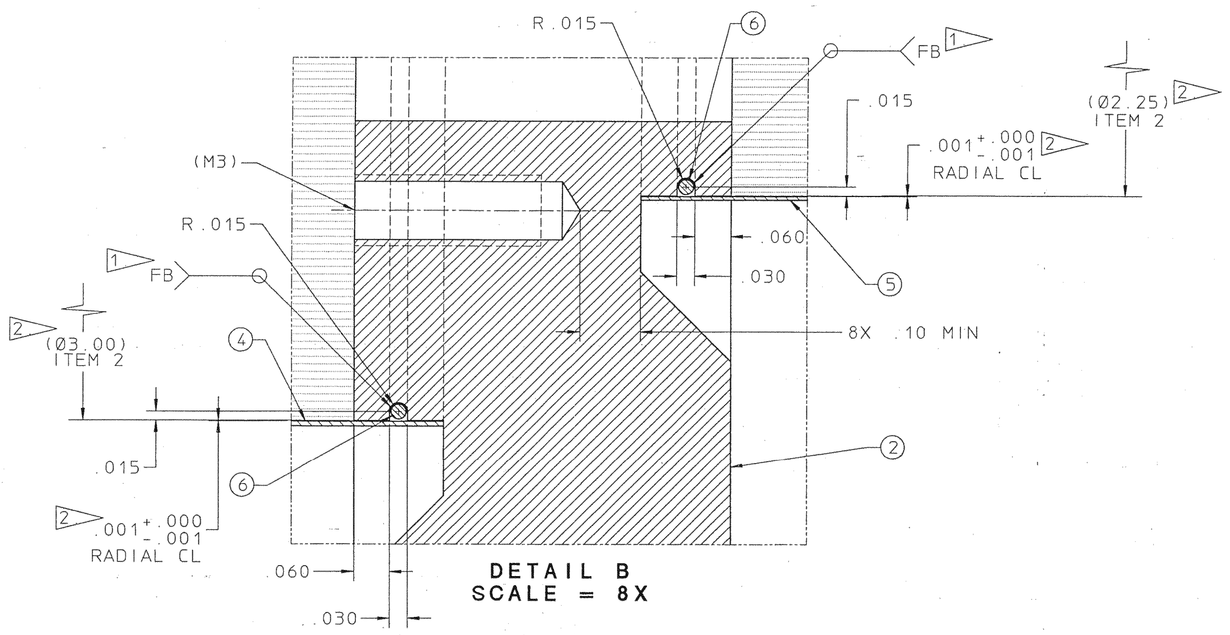

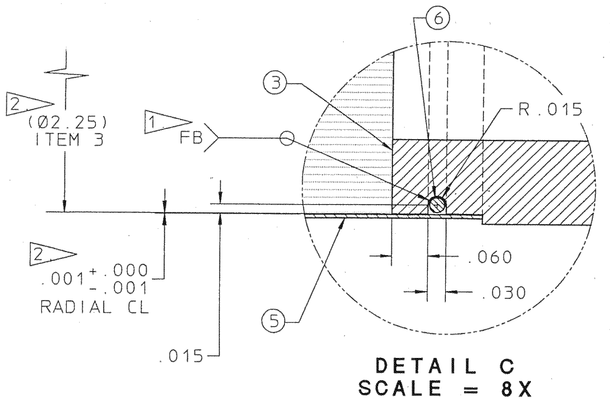

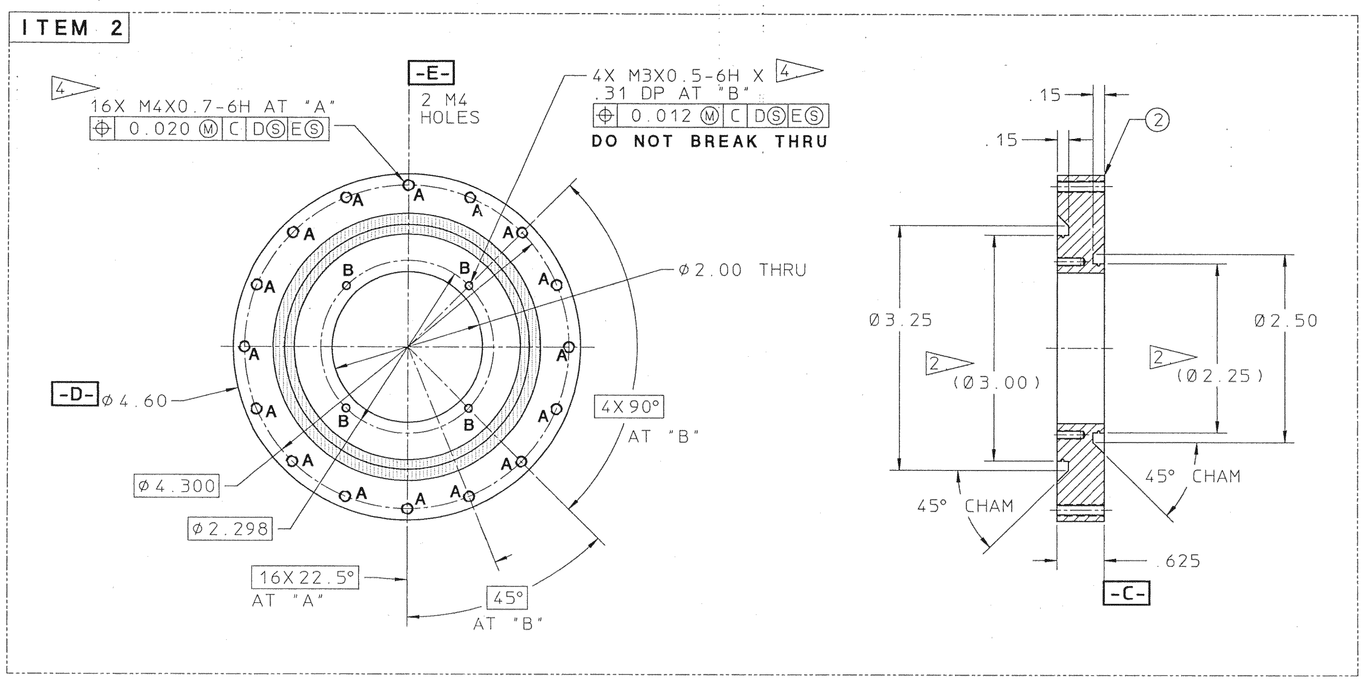

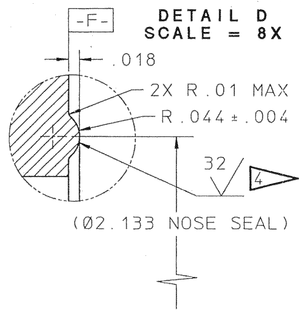

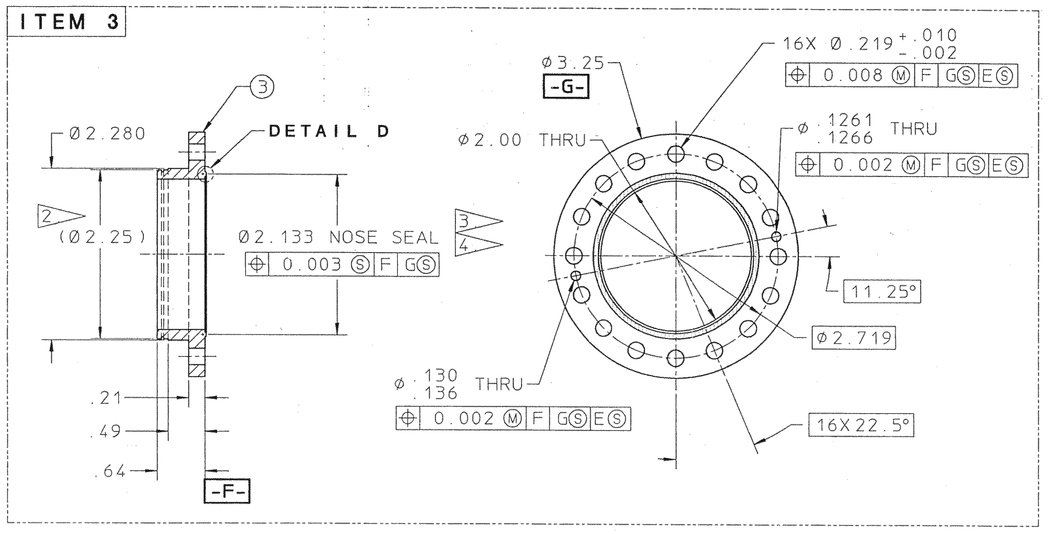

22G3396

USE ONLY APPROVED RADIO-PURE COPPER FOR ITEMS 2 AND 3

REQD	ITEM	PART NO.	DESCRIPTION
REF	7	22G2876	LEAK-CHECK FIXTURE, NTI BRAZEMENT
A/R	6		WIRE, BRAZING
1	5		BELLOWS, FORMED, SST, MDC FB-6536 OR EQL
1	4		BELLOWS, FORMED, SST, MDC FB-6530 OR EQL
(1)	3		(COLD FLANGE) PLATE, COPPER, OFE 10100
(1)	2		(MID-FLANGE) PLATE, COPPER, OFE 10100
(1)	1	9528-10663	(WARM FLANGE) PLATE, 304 CRES

REV	DWG	CHK	ZONE	DATE	CHANGES

UNLESS OTHERWISE SPECIFIED
TOLERANCES: .X ± .1 — FRAC. ±1/64; .XX ± .02 — ANGLES ± 1°; .XXX ± .005 — FINISH 125
THREADS ARE CLASS 2. CHAMFER ENDS OF ALL SCREW THREADS 30°. CUT 1.5 PITCH THD RELIEF WITH ROUND NOSE TOOL ON MACHINE CUT THREADS. BREAK EDGES .016 MAX. ON MACHINED WORK. REMOVE BURRS WELD SPLATTER & LOOSE SCALE
REFERENCES: ANSI Y14.5 & B46.1.

SHOP ORDERS: ACCT. NO. / SERIAL NO. / DATE ISSD. / DATE REQD. / NO. REQD. / DELIVER TO
SURFACE TREATMENT: BRIGHT DIP
IDENT. METH.: TAG
DWG BY: P. LUFT — DATE 10-27-93
CHK BY: J. TAYLOR — DATE 11-2-93

LAWRENCE BERKELEY LABORATORY
UNIVERSITY OF CALIFORNIA-BERKELEY

WIMP DETECTOR
E-STEM ASSY
BRAZEMENT, NITROGEN THERMAL INTERCEPT

PATENT CLEAR | DWG. TYPE: C - D | SHOWN ON: 22G3536 | SCALE: FULL | DO NOT SCALE PRINTS
MICROFILMED | DESIGN ACCT. NO.: 7916-05 | CATEGORY CODE | DWG. NO.: 22G3396 | SIZE | REV.