NOTES:

1. ELECTRON BEAM WELD - COMPLETE JOINT PENETRATION.
2. MATCH WELD PREP OF ITEMS 1 AND 2 PER DETAIL E.
3. SLIT DEPTH TO MATCH 2.375 ID AS SHOWN.
4. GOLD PLATE ALL SURFACES, INSIDE AND OUT. MASK OFF ALL INTERNAL THREADS.

REQ	ITEM	PART NUMBER	DESCRIPTION
A/R	1		TUBE, COPPER, OFE 10100, 3.375 OD X .50 WALL
A/R	2		PLATE, COPPER, OFE 10100

USE ONLY APPROVED RADIO-PURE MATERIAL

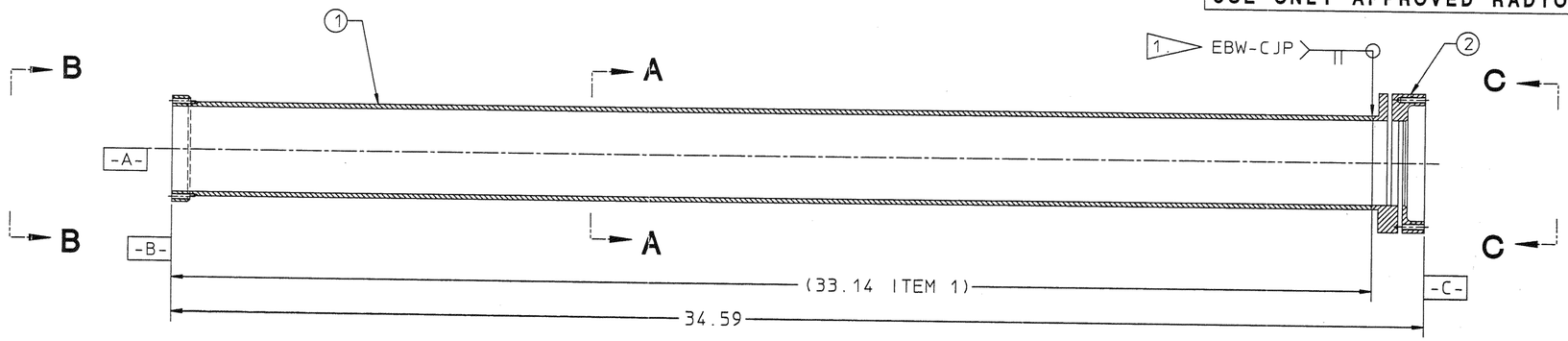

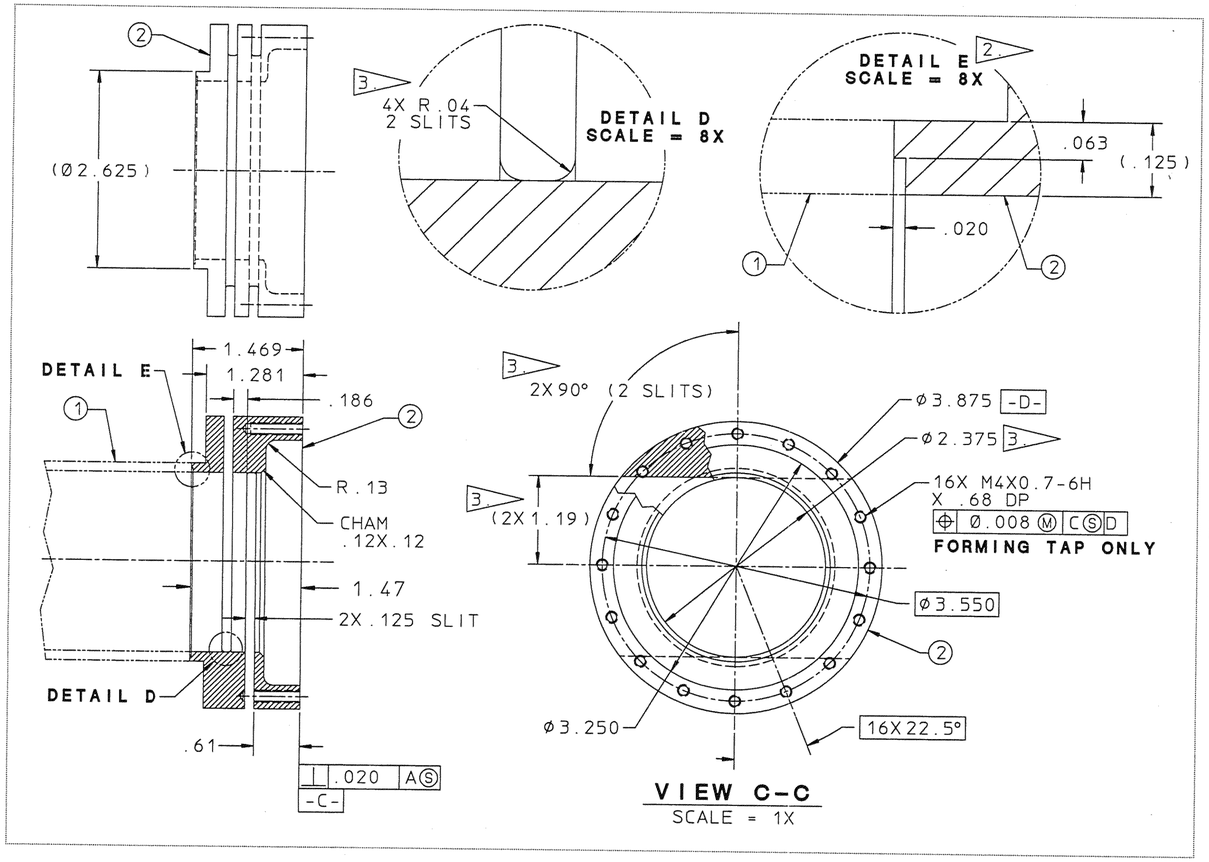

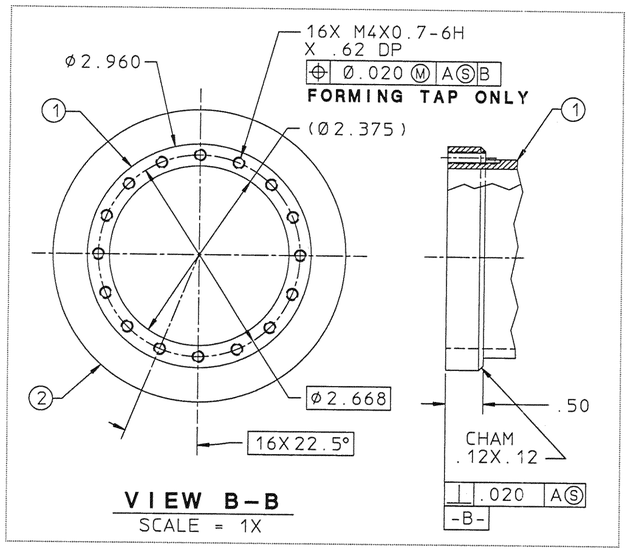

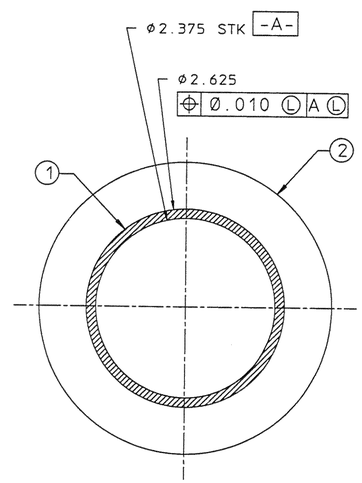

22G3434

REV	DWG	CHK	ZONE	DATE	CHANGES

UNLESS OTHERWISE SPECIFIED

TOLERANCES		
.X ± .1	FRAC. ±1/64	
.XX ± .02	ANGLES ± 1°	
.XXX ± .005	FINISH 125	

THREADS ARE CLASS 2
CHAMFER ENDS OF ALL SCREW THREADS 30°.
CUT 1.5 PITCH THRD RELIEF WITH ROUND NOSE TOOL ON MACHINE CUT THREADS.
BREAK EDGES .016 MAX. ON MACHINED WORK.
REMOVE BURRS WELD SPLATTER & LOOSE SCALE
REFERENCES: ANSI Y14.5 & B46.1.

SHOP ORDERS

ACCT. NO.	SERIAL NO.	
DATE ISSD	DATE REQD.	NO. REQD.
DELIVER TO		
SURFACE TREATMENT	BRIGHT DIP	
IDENT. METH.	TAG	
DWG. BY	P. LUFT	DATE 10-7-93
CHK. BY	J. TAYLOR	DATE 10-14-93

LAWRENCE BERKELEY LABORATORY
UNIVERSITY OF CALIFORNIA-BERKELEY

WIMP DETECTOR
E-STEM ASSY
E-STEM, LN

PATENT CLEAR	DWG. TYPE	SHOWN ON	SCALE	DO NOT SCALE PRINTS
	C - D	22G3536	HALF	
MICROFILMED	DESIGN ACCT. NO.	CATEGORY CODE	DWG. NO.	SIZE / REV.
	7916-05		22G3434	