NOTES:

1. **MAINTAIN STOCK FINISH SCRATCH FREE.**
2. DEBURR HOLES WITH MINIMUM CHAMFER.
3. RETAIN ALL TOOLING FOR PRODUCTION OF ADDITIONAL PARTS.

22G3452	REQD	ITEM	PART NUMBER	
				COPPER SHEET, .020 THK, OFE 10100, ANNEALED

USE ONLY APPROVED RADIO-PURE MATERIAL

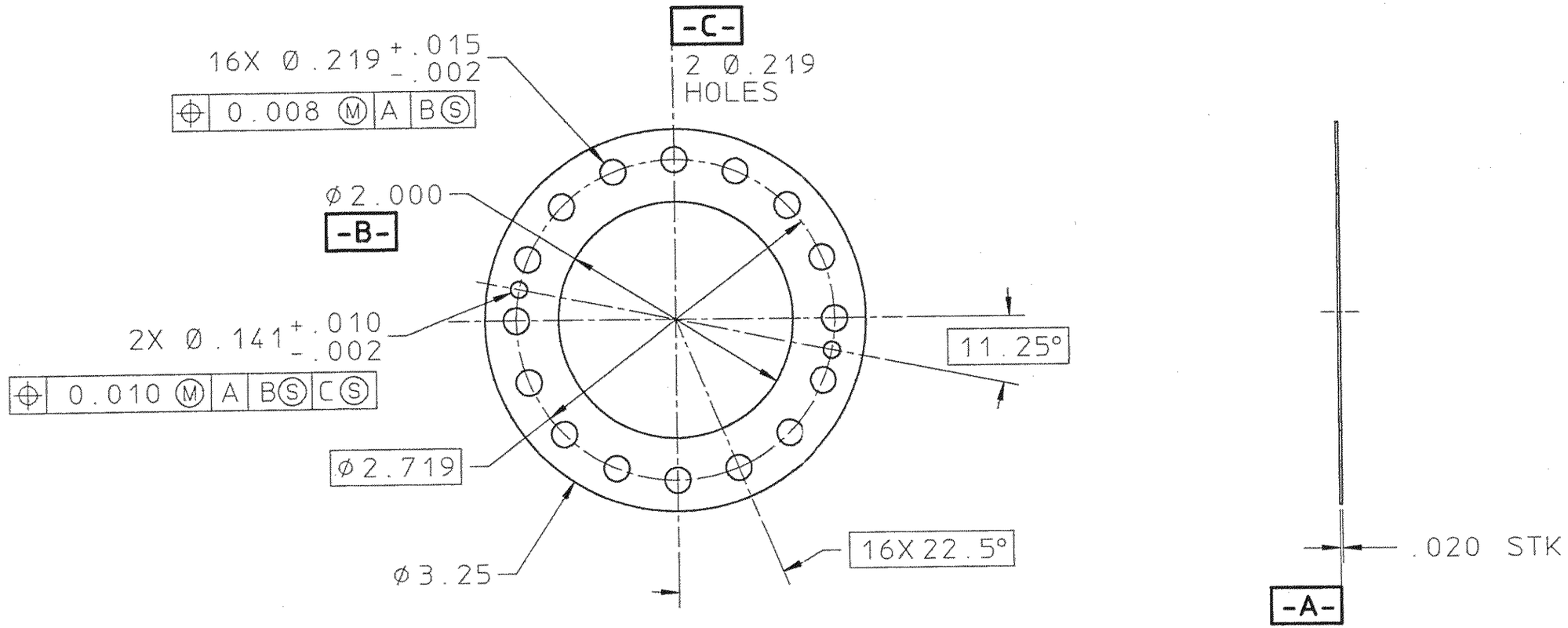

REV	DWN	CHK	DATE	DESCRIPTION

UNLESS OTHERWISE SPECIFIED
TOLERANCE .X ±.1 .XX ± .02 .XXX ±.005
SURFACE FINISH 125 ✓

1. SAWED, FLAMECUT, SHEARED OR CUT STOCK FINISH.
2. THREADS CLASS 2.
3. CHAMFER ENDS OF ALL SCREW THRDS 30°.
4. 1 1/2 PITCH RELIEF WITH ROUND NOSE TOOL ON ALL MACHINE CUT THRDS.
5. BREAK EDGES 1/64 MAX. ON MACHINE WORK.
6. REMOVE BURRS, LOOSE SCALE AND WELD SPLATTER.
7. REF.-USASI OR ASA STDS SECT Y-14 & B46-1.

SHOP ORDERS

ACCT NO	SER NO	
DATE ISSD	DATE REQD	NO REQD
DELIVER TO		
SURFACE TREATMENT	BRIGHT DIP	
IDENTIFIC METHOD	TAG	
DWG BY	P. LUFT P.L.	DATE 10-20-93
CHK BY	J. TAYLOR J.T.	DATE 10-29-93

LAWRENCE BERKELEY LABORATORY
UNIVERSITY OF CALIFORNIA-BERKELEY

WIMP DETECTOR
E-STEM ASSY
GASKET, GAMMA-SHIELD

PAT CLEAR	DWG TYPE	SHOWN ON	SCALE: FULL
	C - D	22G3536	DO NOT SCALE PRINTS
MICROFILMED	DESIGN ACCT NO	CATEGORY CODE	DWG NO / REV
M	7916-05		22G3452