NOTES:

1. GOLD PLATE ALL SURFACES EXCEPT: MASK OFF M4 HOLES AND Ø.188 HOLES AT Ø5.438 BC. DO NOT MASK HOLES AT 'A' AND 'B', OR EDGE HOLES.

REQ	ITEM	PART NUMBER	DESCRIPTION
			PLATE, COPPER, OFE 10100

USE ONLY APPROVED RADIO-PURE MATERIAL

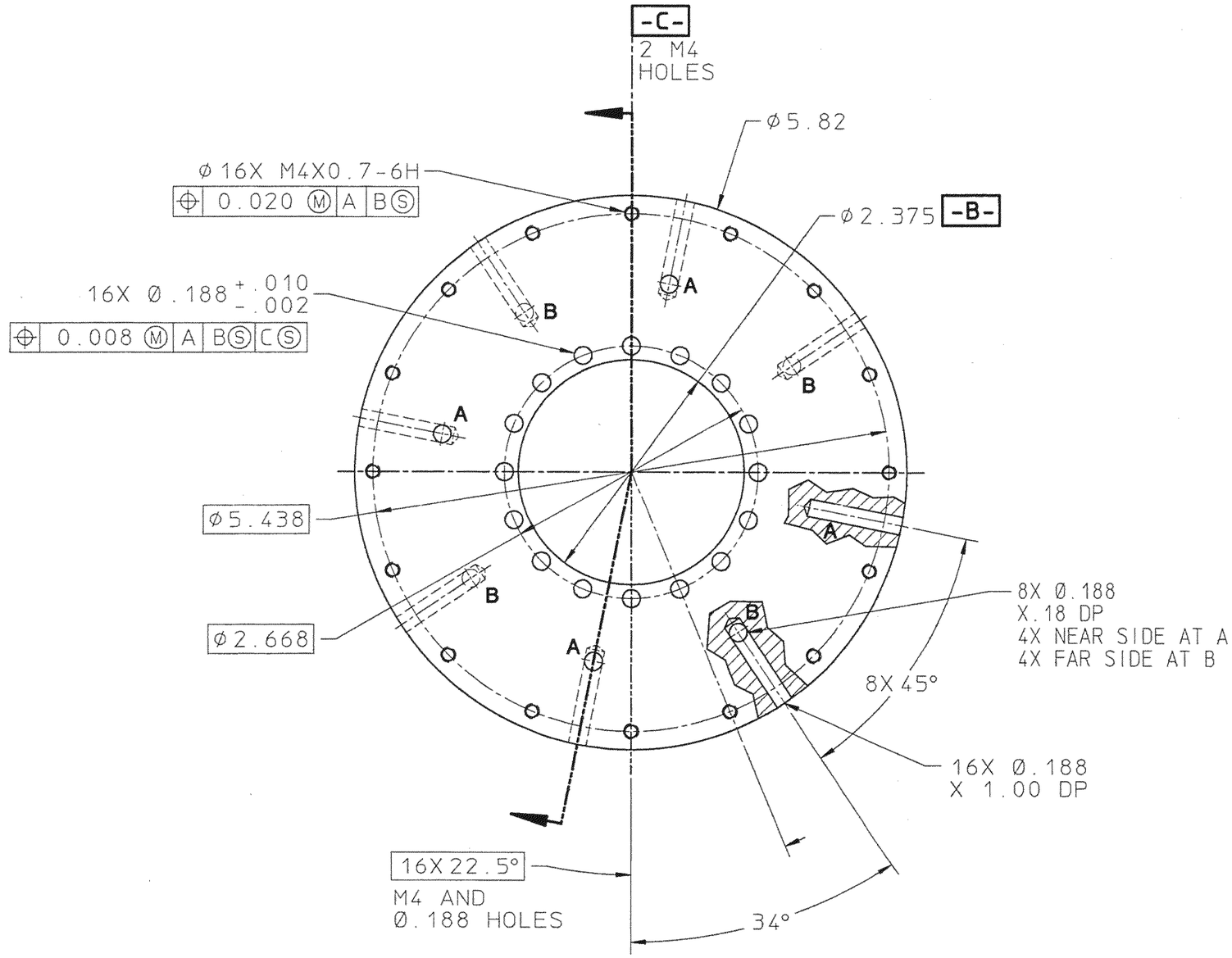

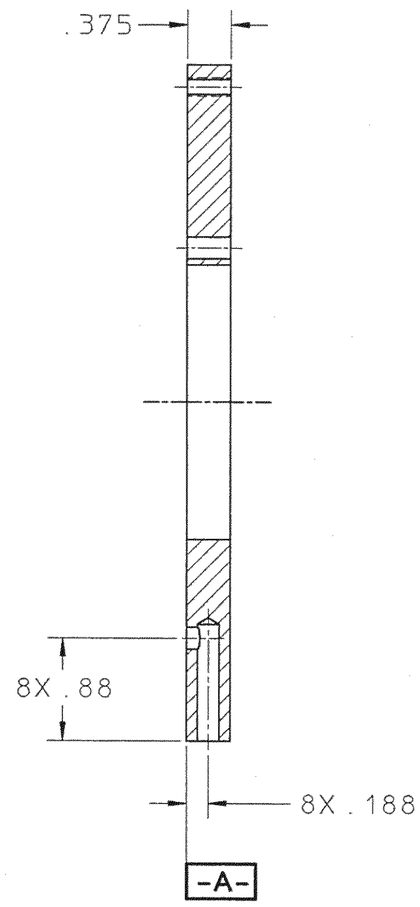

22G3463

REV	DWG	CHK	ZONE	DATE	CHANGES

UNLESS OTHERWISE SPECIFIED

TOLERANCES		
	.X ± .1	FRAC. ±1/64
	.XX ± .02	ANGLES ±0.1°
	.XXX ± .005	FINISH 125√

THREADS ARE CLASS 2
CHAMFER ENDS OF ALL SCREW THREADS 30°.
CUT 1.5 PITCH THRD RELIEF WITH ROUND NOSE TOOL ON MACHINE CUT THREADS.
BREAK EDGES .016 MAX. ON MACHINED WORK
REMOVE BURRS WELD SPLATTER & LOOSE SCALE
REFERENCES: ANSI Y14.5 & B46.1.

SHOP ORDERS

ACCT. NO.	SERIAL NO.	
DATE ISSD	DATE REQD.	NO. REQD.
DELIVER TO		
SURFACE TREATMENT	BRIGHT DIP	
IDENT. METH.	TAG	
DWG. BY	P. LUFT P.L.	DATE 10-20-93
CHK. BY	J. TAYLOR J.T.	DATE 10-29-93

LAWRENCE BERKELEY LABORATORY
UNIVERSITY OF CALIFORNIA-BERKELEY

WIMP DETECTOR
E-STEM ASSY
FLANGE, ADAPTER, E-STEM, LN

PATENT CLEAR	DWG. TYPE	SHOWN ON	SCALE	DO NOT SCALE PRINTS
	C - D	22G3536	FULL	
MICROFILMED	DESIGN ACCT. NO.	CATEGORY CODE	DWG. NO.	SIZE / REV.
M	7916-05		22G3463	