NOTES:

1. PARENT MATERIAL WELD ONLY.
2. GOLD PLATE ALL SURFACES EXCEPT: MASK ALL 4-40 HOLES.
3. MATCH MATING DIAMETERS OF FLANGES, ITEMS 2 AND 3, TO ROLL-UP, ITEM 1.

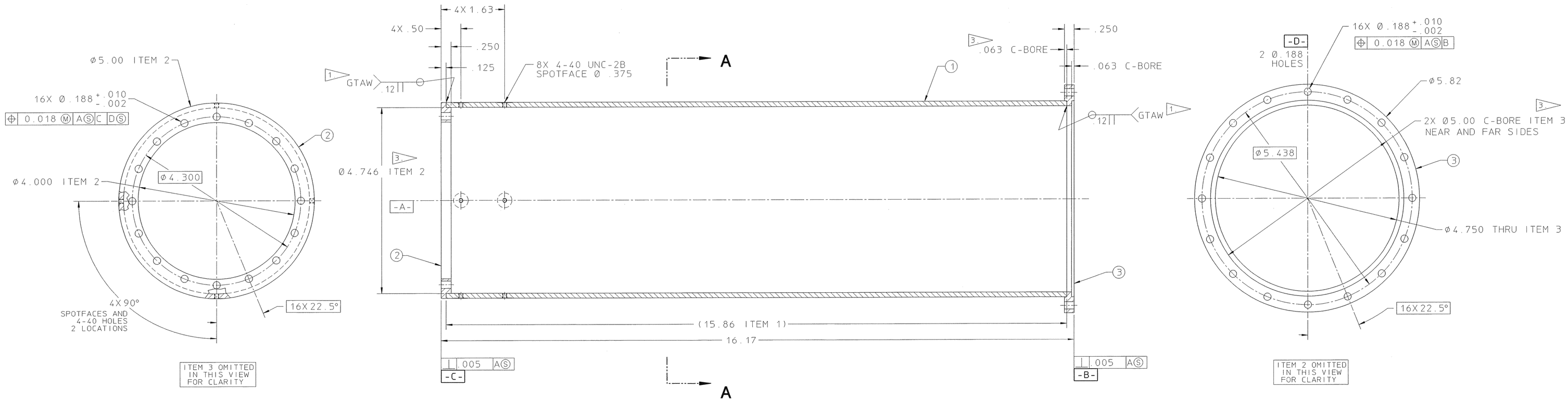

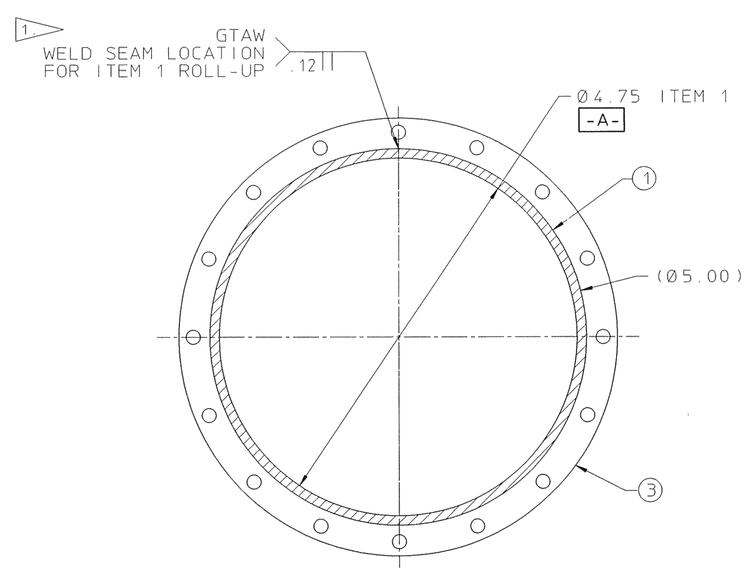

SECTION A–A

22G3476

USE ONLY APPROVED RADIO-PURE MATERIAL

REQD	ITEM	PART NO.	DESCRIPTION
A/R	3		PLATE, COPPER, OFE 10100
A/R	2		PLATE, COPPER, OFE 10100
A/R	1		SHEET, COPPER, 1/8 THK, OFE 10100

REV	DWG	CHK	ZONE	DATE	CHANGES

UNLESS OTHERWISE SPECIFIED
TOLERANCES: .X ± .1 FRAC. ± 1/64; .XX ± .02 ANGLES ± 1°; .XXX ± .005 FINISH 125√
THREADS ARE CLASS 2.
CHAMFER ENDS OF ALL SCREW THREADS 30°.
CUT 1.5 PITCH THRD RELIEF WITH ROUND NOSE TOOL ON MACHINE CUT THREADS.
BREAK EDGES: .016 MAX. ON MACHINED WORK
REMOVE BURRS WELD SPLATTER & LOOSE SCALE
REFERENCES: ANSI Y14.5 & B46.1

SHOP ORDERS
ACCT. NO. | SERIAL NO.
DATE ISSD. | DATE REQD. | NO. REQD.
DELIVER TO
SURFACE TREATMENT: BRIGHT DIP
IDENT. METH.: TAG
DWG. BY: P. LUFT | DATE 10-21-93
CHK. BY: J. TAYLOR | DATE 10-29-93

LAWRENCE BERKELEY LABORATORY
UNIVERSITY OF CALIFORNIA-BERKELEY

WIMP DETECTOR
E-STEM ASSY
SHIELD-SECTION, E-STEM, LN

PATENT CLEAR	DWG. TYPE	SHOWN ON	SCALE	DO NOT SCALE PRINTS
	C - D	22G3536	FULL	

MICROFILMED	DESIGN ACCT. NO.	CATEGORY CODE	DWG. NO.	SIZE	REV.
	7916-05		22G3476		