NOTES:

1. ELECTRON BEAM WELD - COMPLETE JOINT PENETRATION, ITEMS 1,2 - VACUUM TIGHT.
2. GAS TUNGSTEN ARC WELD, ITEMS 1,3 -VACUUM TIGHT.
3. MATCH WELD PREP OF ITEMS 1 AND 2 PER DETAIL E.
4. MATCH WELD PREP OF ITEMS 1 AND 3 PER SIDE SECTION OF VIEW B-B.
5. INDICATED O-RING DIMENSIONS TO THEORETICAL SHARP CORNERS.
6. PROTECT INDICATED SEAL SURFACE FROM SCRATCHES.
7. GOLD PLATE ALL SURFACES, INSIDE AND OUT, EXCEPT O-RING GROOVE AND O-RING SEAL SURFACE.

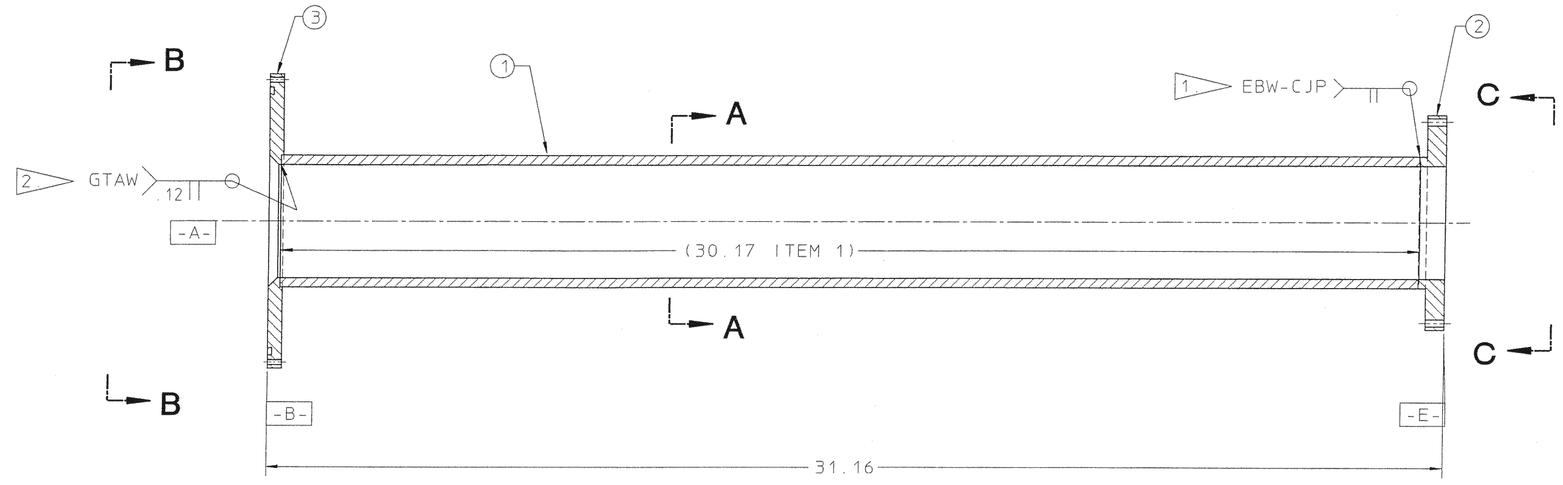

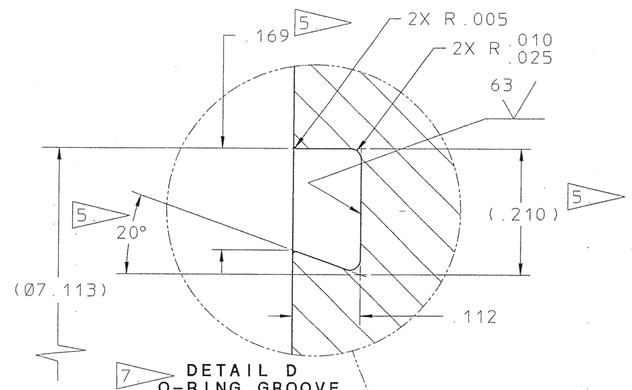

DETAIL D
O-RING GROOVE
SCALE = 8X

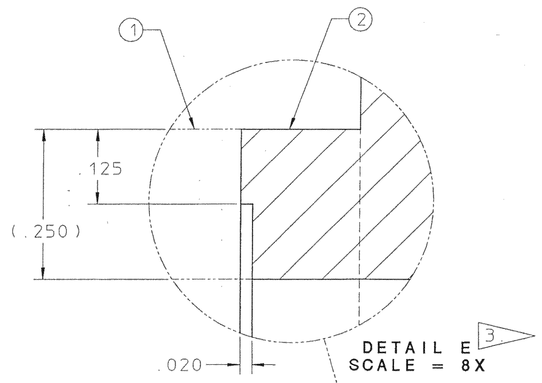

DETAIL E
SCALE = 8X

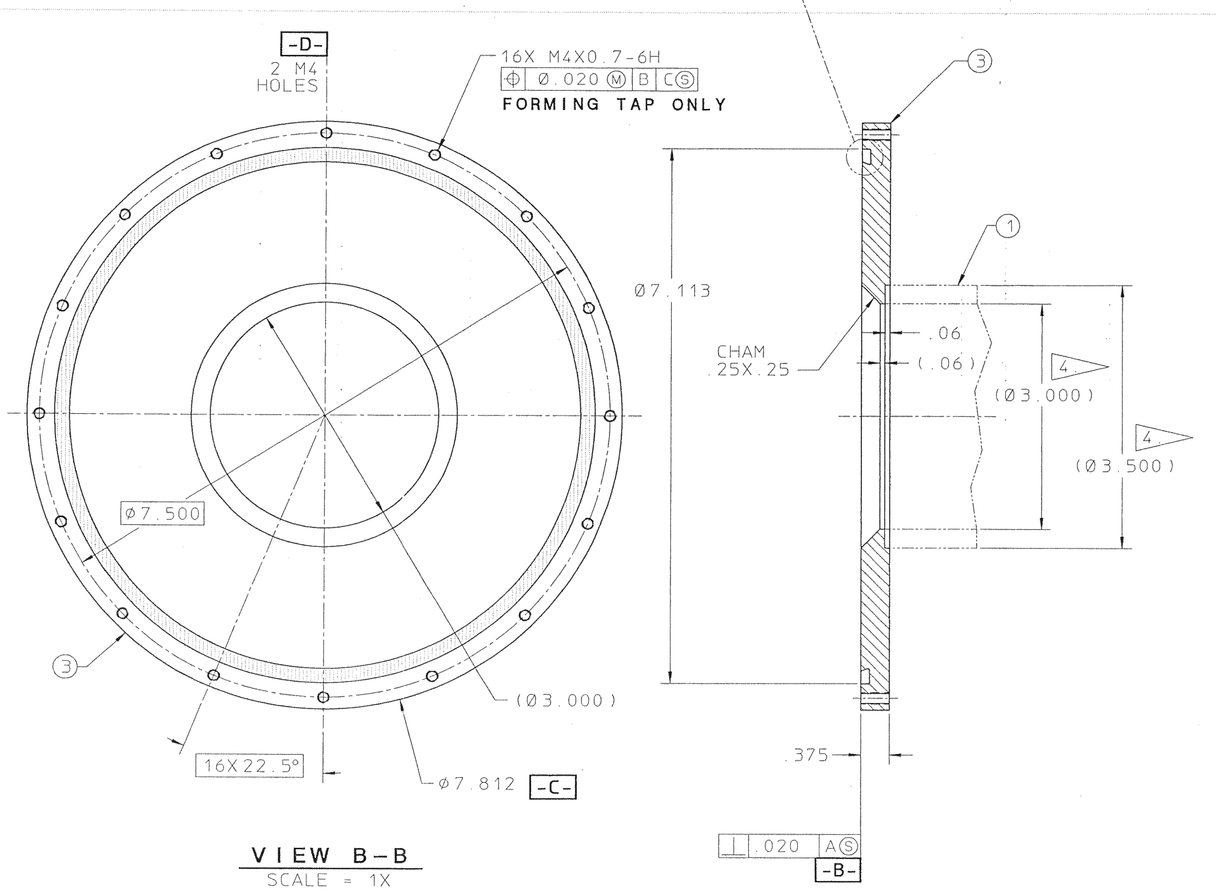

VIEW B-B
SCALE = 1X

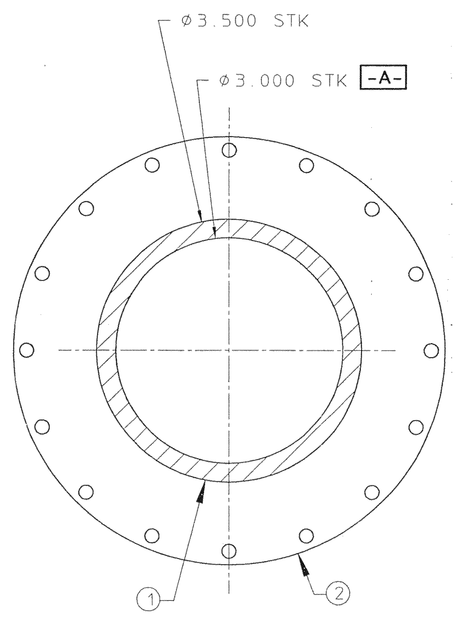

SECTION A-A
SCALE = 1X

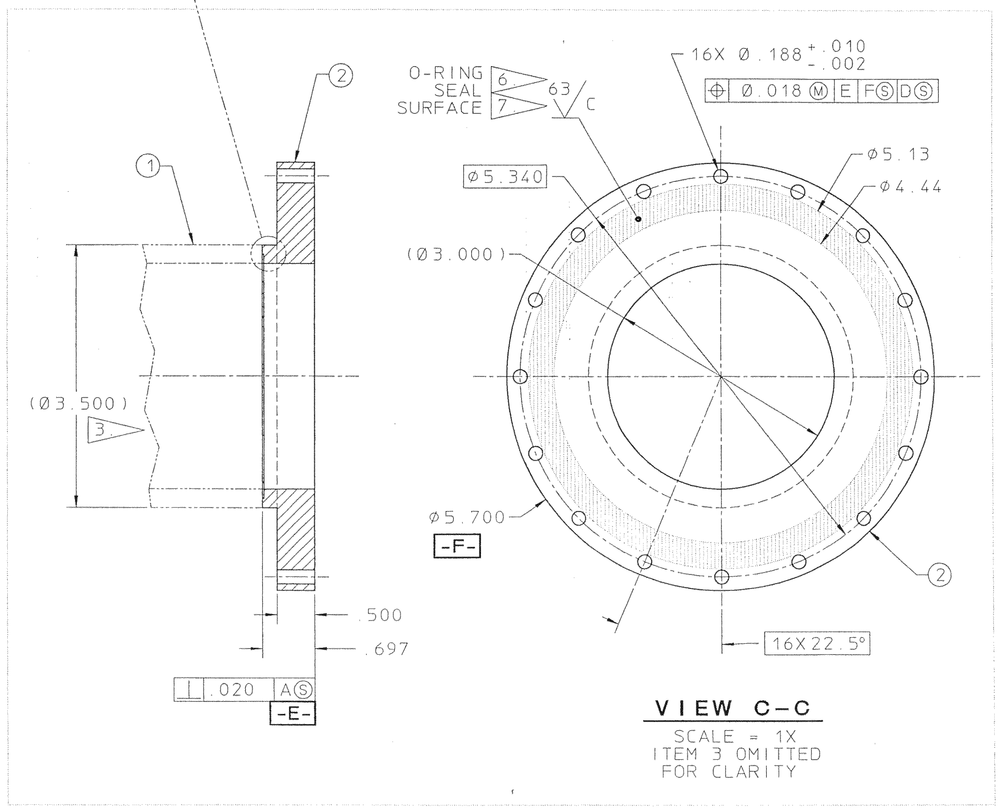

VIEW C-C
SCALE = 1X
ITEM 3 OMITTED FOR CLARITY

22G3516

USE ONLY APPROVED RADIO-PURE MATERIAL

REQD	ITEM	PART NO.	DESCRIPTION
A/R	3		PLATE, COPPER, OFE 10100
A/R	2		PLATE, COPPER, OFE 10100
A/R	1		TUBE, COPPER, OFE 10100, 3.500 OD X .25 WALL

REV	DWG	CHK	ZONE	DATE	CHANGES

UNLESS OTHERWISE SPECIFIED
TOLERANCES: .X ± .1 FRAC. ±1/64 ; .XX ± .02 ANGLES ± 1° ; .XXX ± .005 FINISH 125
THREADS ARE CLASS 2
CHAMFER ENDS OF ALL SCREW THREADS 30°, CUT 1.5 PITCH THRD RELIEF WITH ROUND NOSE TOOL ON MACHINE CUT THREADS.
BREAK EDGES .016 MAX. ON MACHINED WORK. REMOVE BURRS WELD SPLATTER & LOOSE SCALE.
REFERENCES: ANSI Y14.5 & B46.1.

SHOP ORDERS
ACCT. NO. | SERIAL NO.
DATE ISSD | DATE REQD. | NO. REQD.
DELIVER TO
SURFACE TREATMENT BRIGHT DIP
IDENT. METH. TAG
DWG. BY P. LUFT P.L. DATE 10-8-93
CHK. BY J. TAYLOR J.T DATE 10-15-93

LAWRENCE BERKELEY LABORATORY
UNIVERSITY OF CALIFORNIA-BERKELEY

WIMP DETECTOR
E-STEM ASSY
E-STEM, OVC

PATENT CLEAR | DWG. TYPE C - D | SHOWN ON 22G3536 | SCALE HALF | DO NOT SCALE PRINTS
MICROFILMED | DESIGN ACCT. NO. 7916-05 | CATEGORY CODE | DWG. NO. 22G3516 | SIZE | REV.