NOTES:

1. PARENT MATERIAL WELD ONLY. ALL GTAW (TIG) WELDS TO BE MADE WITH ZIRCONIATED WELD TIPS, NOT THORIATED.
2. ALL WELDS AND BRAZING TO BE VACUUM TIGHT.
3. PROTECT INDICATED SEAL SURFACES FROM SCRATCHES.
4. INDICATED O-RING DIMENSIONS ARE TO THEORETICAL SHARP CORNERS.
5. GOLD PLATE AFTER ASSY ALL SURFACES EXCEPT: MASK OFF ALL FLANGE TAPPED AND THROUGH FASTENER HOLES, AND O-RING GROOVES.
6. MATCH ID OF FLANGES, ITEMS 2 AND 3, TO OD OF ROLL-UP, ITEM 1.

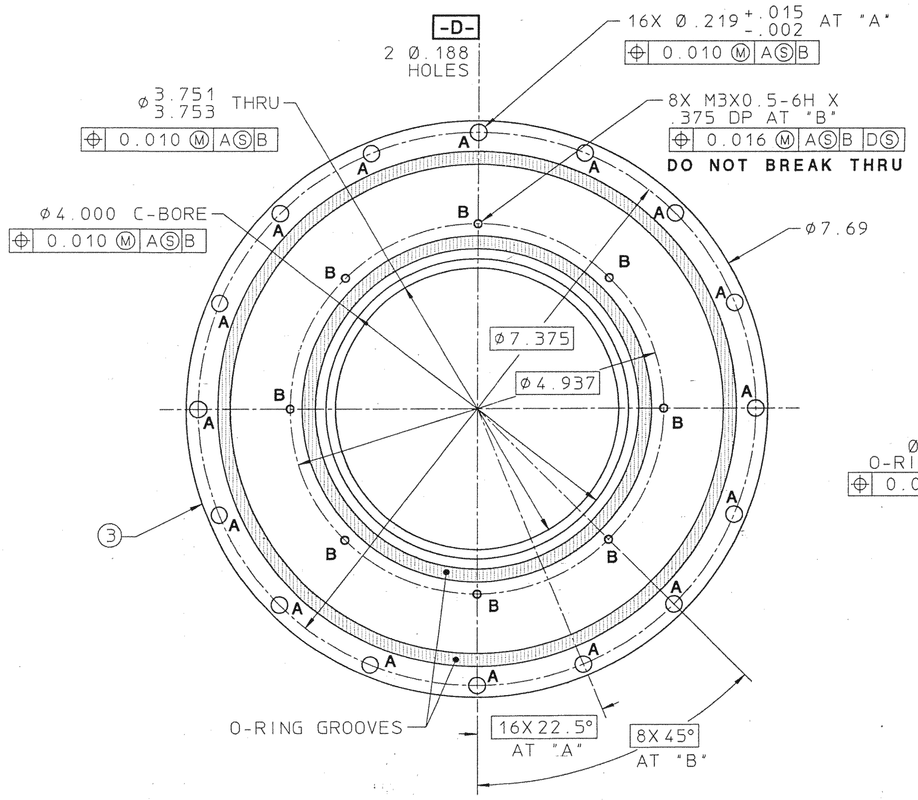

END VIEW
ONLY ITEM 3 SHOWN

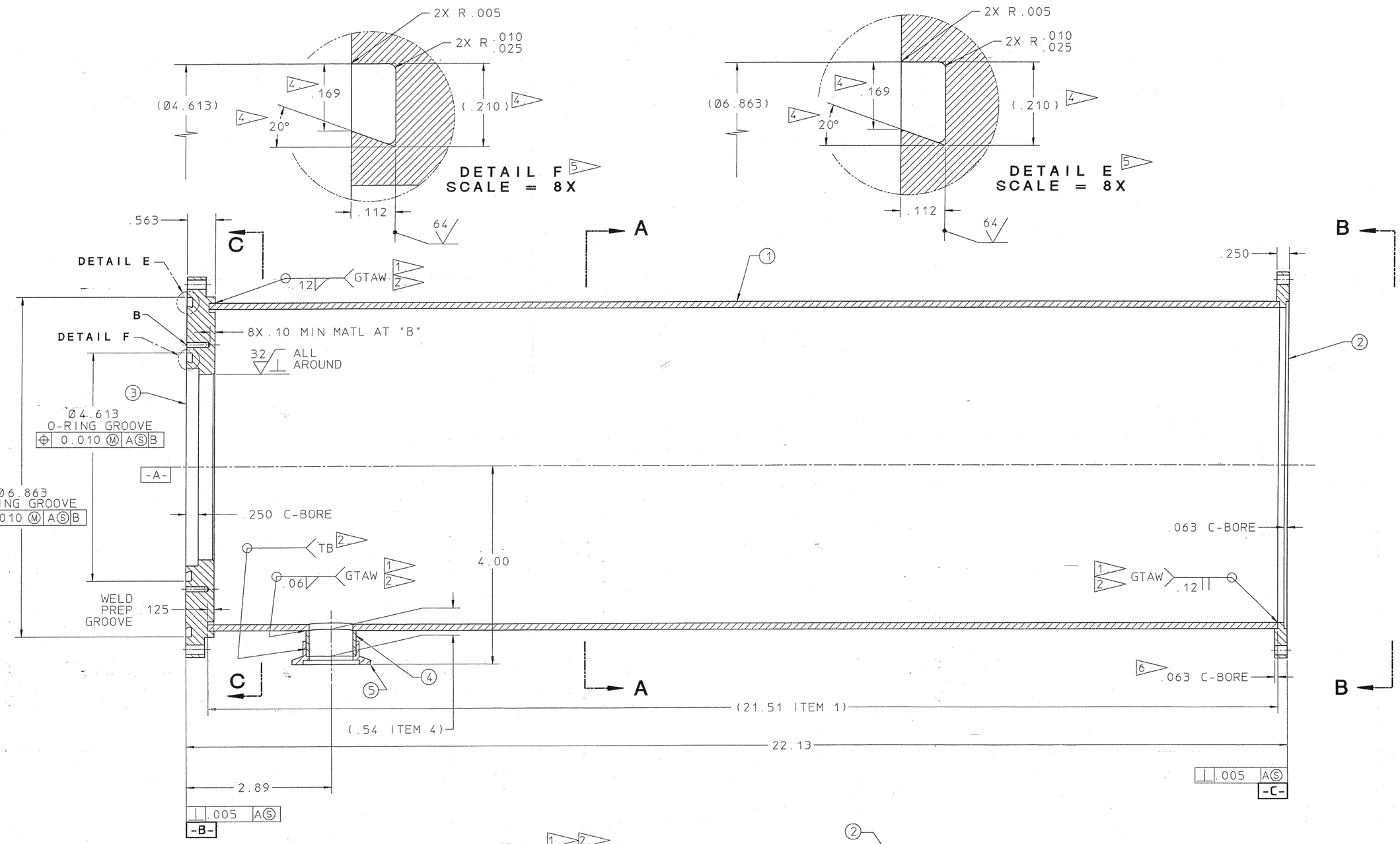

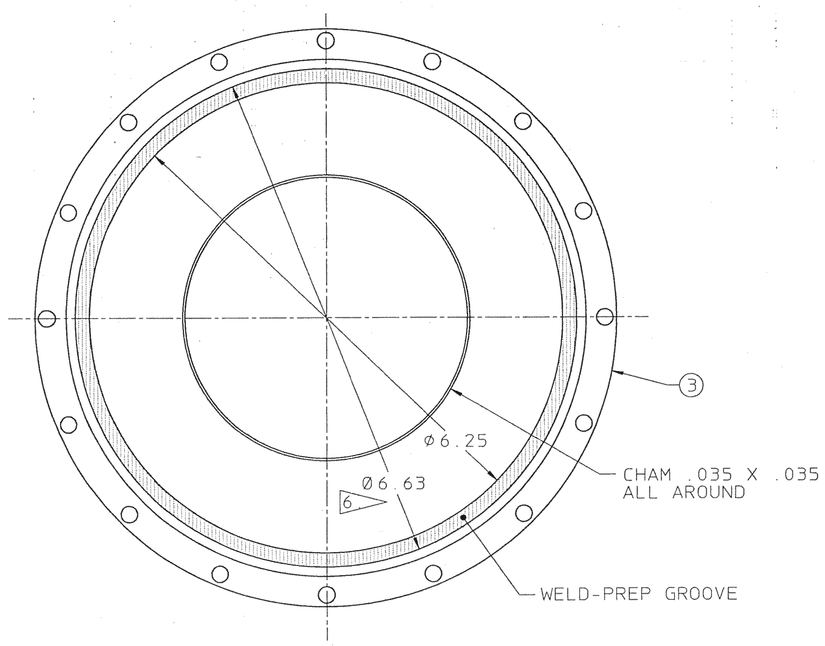

SECTION C–C
ONLY ITEM 3 SHOWN

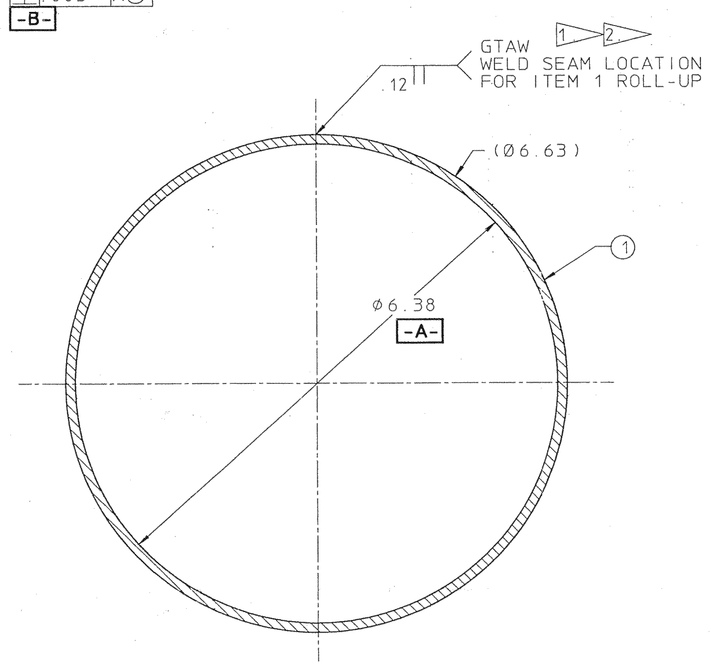

SECTION A–A
ONLY ITEM 1 SHOWN

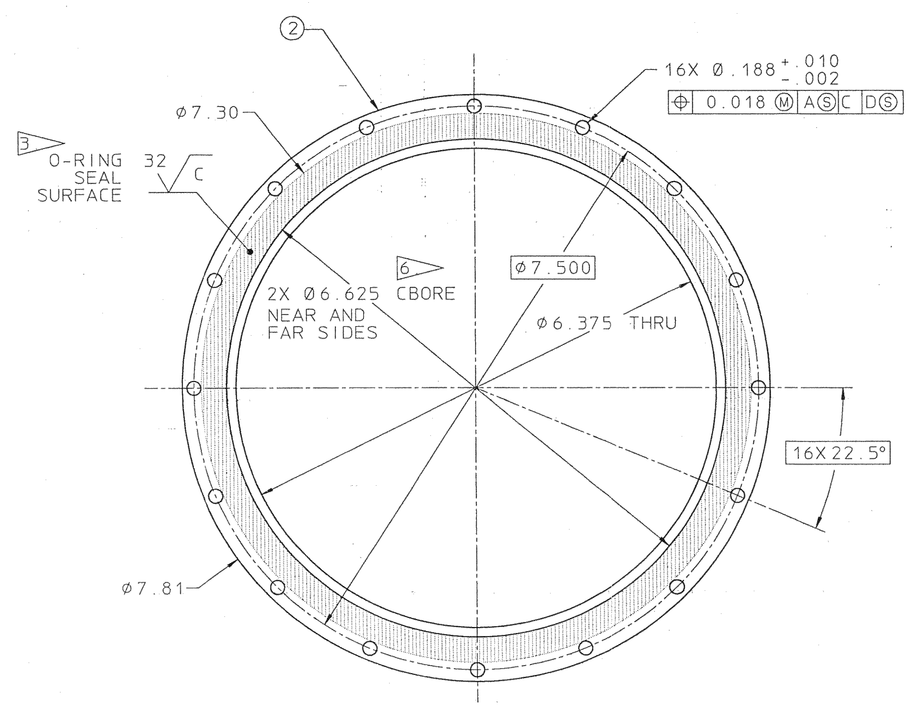

VIEW B–B
ONLY ITEM 2 SHOWN

22G3526

USE ONLY APPROVED RADIO-PURE COPPER FOR ITEMS 1–3

REQD	ITEM	PART NO.	DESCRIPTION
1	5		FITTING, MDC K100-W KWIK-FLANGE OR EQL, CRES OR BRASS
A/R	4	4710-14090	TUBE, COPPER, 1.00 OD X .065 WALL
A/R	3		PLATE, COPPER, OFE 10100
A/R	2		PLATE, COPPER, OFE 10100
A/R	1		SHEET, COPPER, OFE 10100, .125 THK

REV	DWG	CHK	ZONE	DATE	CHANGES

UNLESS OTHERWISE SPECIFIED
TOLERANCES: .X ± .1 FRAC. ±1/64; .XX ± .02 ANGLES ± 1°; .XXX ± .005 FINISH 125
THREADS ARE CLASS 2
CHAMFER ENDS OF ALL SCREW THREADS 30°, CUT 1.5 PITCH THRD RELIEF WITH ROUND NOSE TOOL ON MACHINE CUT THREADS.
BREAK EDGES .016 MAX. ON MACHINED WORK
REMOVE BURRS WELD SPLATTER & LOOSE SCALE
REFERENCES: ANSI Y14.5 & B46.1.

SHOP ORDERS
ACCT. NO. | SERIAL NO.
DATE ISSD | DATE REQD. | NO. REQD.
DELIVER TO
SURFACE TREATMENT: BRIGHT DIP
IDENT. METH.: TAG
DWG BY: P. LUFT 10-25-93
CHK. BY: J. TAYLOR 10-29-93

LAWRENCE BERKELEY LABORATORY
UNIVERSITY OF CALIFORNIA-BERKELEY
WIMP DETECTOR
E-STEM ASSY
SHIELD-SECTION, E-STEM, OVC

PATENT CLEAR | DWG. TYPE C - D | SHOWN ON 22G3536 | SCALE FULL | DO NOT SCALE PRINTS
MICROFILMED | DESIGN ACCT. NO. 7916-05 | CATEGORY CODE | DWG. NO. 22G3526 | SIZE | REV.