REQ	ITEM	PART NUMBER	DESCRIPTION
			SHEET, COPPER, .125 THK, OFE 10100

IMPORTANT:
USE ONLY STOCK APPROVED FOR THE WIMP DETECTOR PROJECT BY JOHN TAYLOR OR ROY OKI.

NOTES:

1. GOLD PLATE.

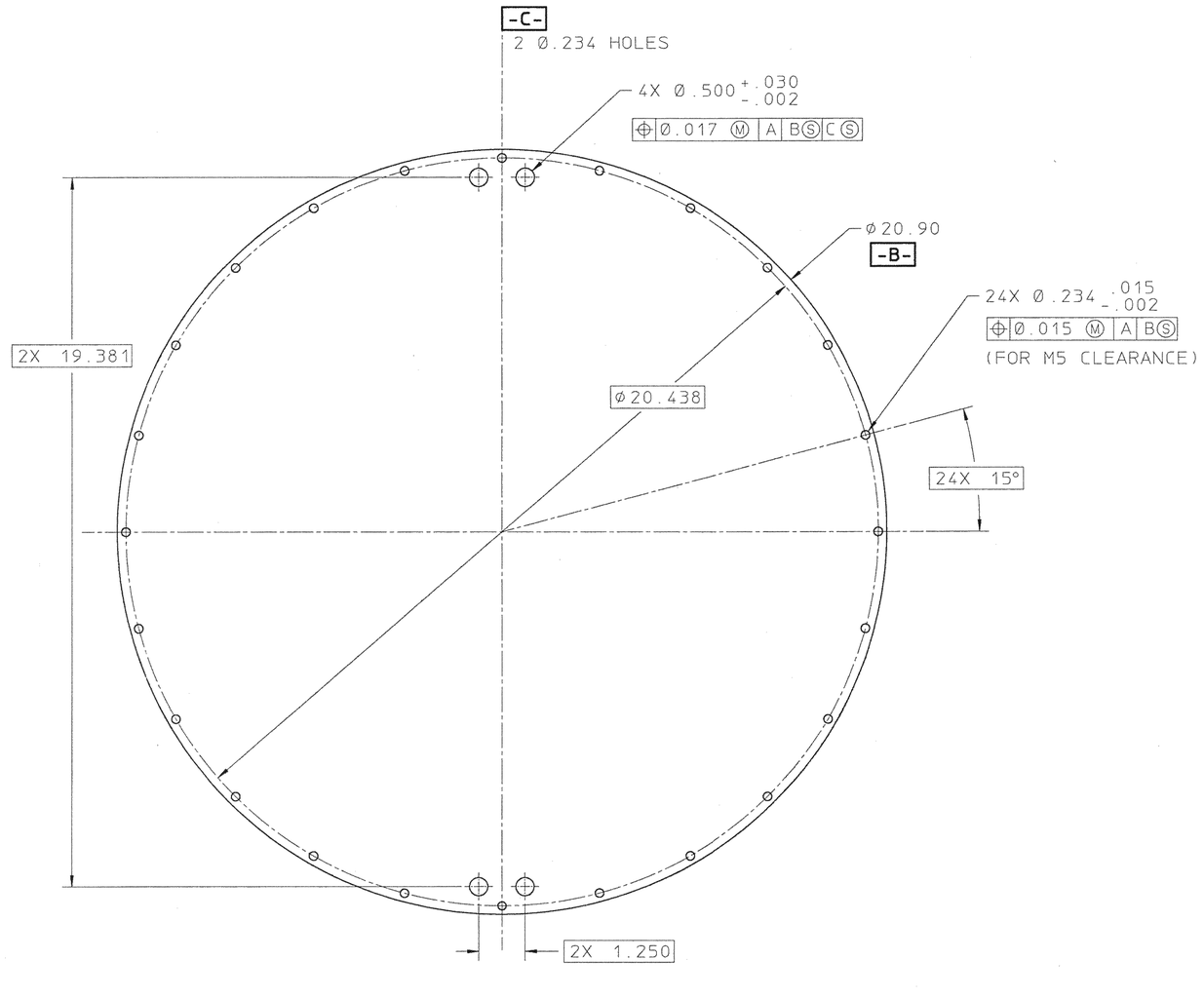

22G3574

REV	DWG	CHK	ZONE	DATE	CHANGES

UNLESS OTHERWISE SPECIFIED

TOLERANCES			
	.X ± .1	FRAC. ± 1/64	
	.XX ± .02	ANGLES ± 1°	
	.XXX ± .005	FINISH 125	

THREADS ARE CLASS 2
CHAMFER ENDS OF ALL SCREW THREADS 30°.
CUT 1.5 PITCH THRD RELIEF WITH ROUND NOSE TOOL ON MACHINE CUT THREADS.
BREAK EDGES .016 MAX. ON MACHINED WORK
REMOVE BURRS WELD SPLATTER & LOOSE SCALE
REFERENCES: ANSI Y14.5 & B46.1.

SHOP ORDERS

ACCT. NO.		SERIAL NO.	
DATE ISSD.	DATE REQD.	NO. REQD.	
DELIVER TO			
SURFACE TREATMENT	BRIGHT DIP		
IDENT. METH.	TAG		
DWG BY	P. LUFT P.L.	DATE	8-6-93
CHK BY	R. ROSS R.R.	DATE	9.3.93

LAWRENCE BERKELEY LABORATORY
UNIVERSITY OF CALIFORNIA-BERKELEY

WIMP DETECTOR
ICE-BOX PAIL ASSY
LID, CAN, ICE-BOX, LN

PATENT CLEAR	DWG. TYPE	SHOWN ON	SCALE	DO NOT SCALE PRINTS
	C - D	22G3626	HALF	
MICROFILMED	DESIGN ACCT. NO.	CATEGORY CODE	DWG. NO.	SIZE / REV.
	7916-05		22G3574	