REQ	ITEM	PART NUMBER	DESCRIPTION
			COPPER, OFE 10100, 1/2 TO FULL HARD

USE ONLY STOCK APPROVED FOR THE W.I.M.P. PROJECT FROM ROY OKI OR JOHN TAYLOR

NOTES:

1. THERE SHALL BE NO SCRATCHES OR SCRIBE LINES OF ANY KIND ACROSS ANY SEAL SURFACE WHETHER THE DISFIGUREMENT IS WITHIN THE SPECIFIED SURFACE CONDITION OR NOT !! PROTECT ALL SEAL SURFACES FROM NICKS AND SCRATCHES.
2. GOLD PLATE. MASK OFF SEAL AREA DURING PLATING.

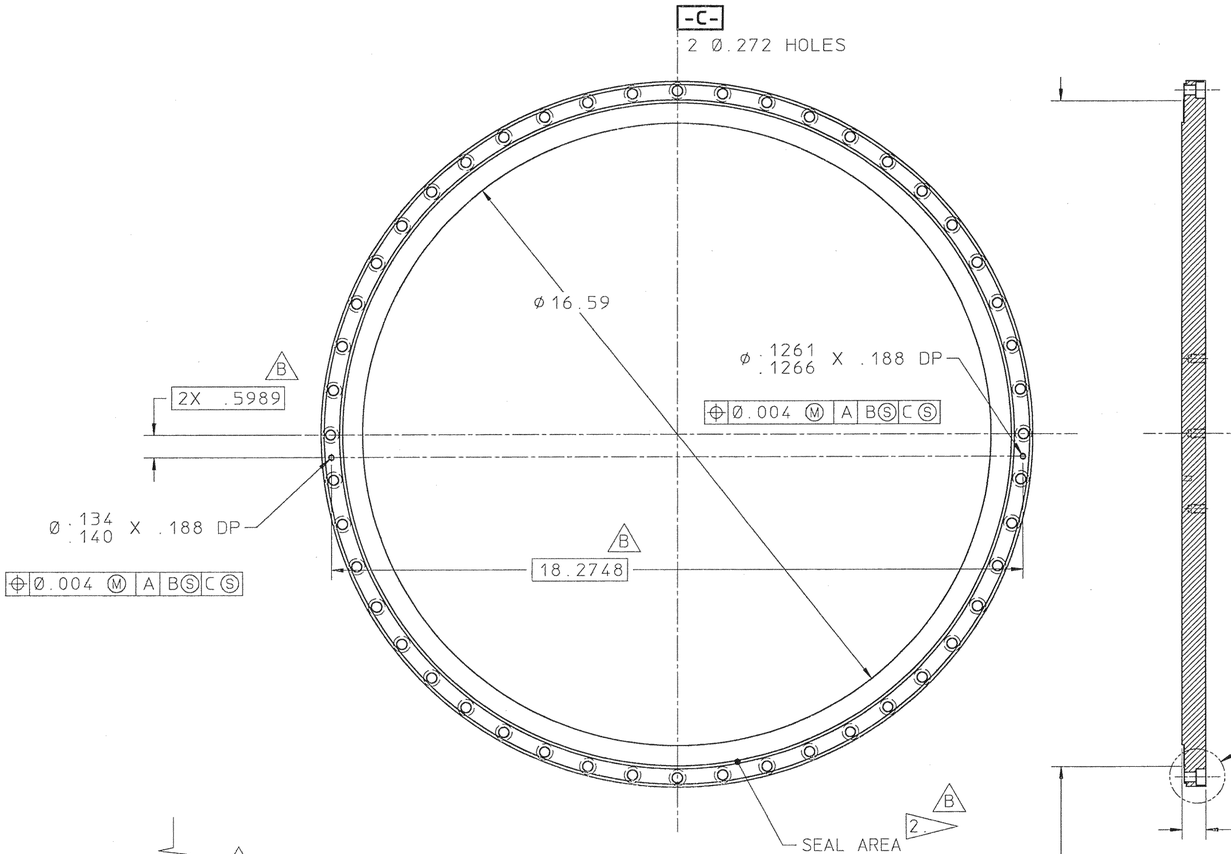

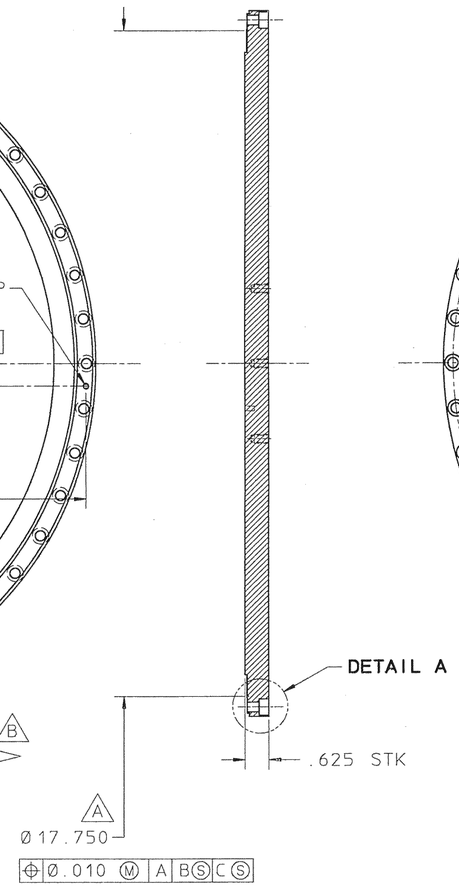

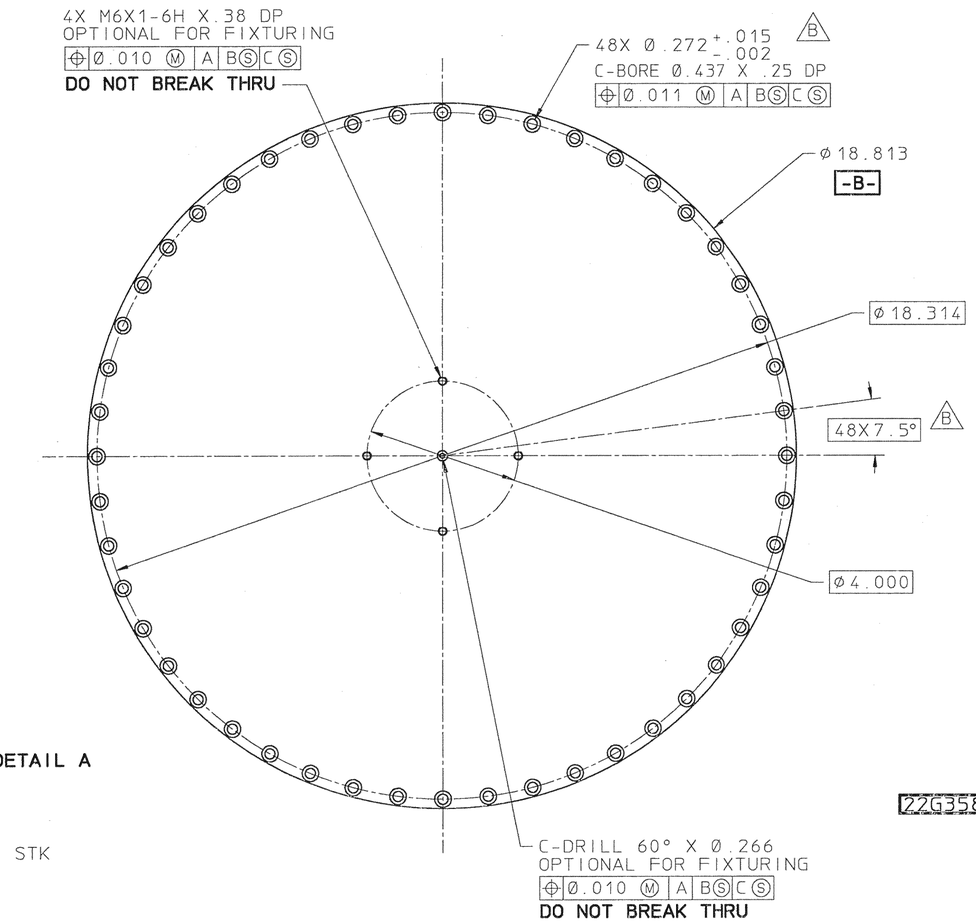

22G3584B

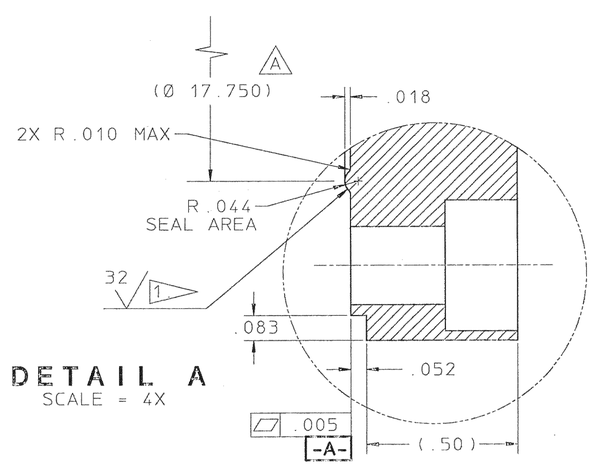

DETAIL A
SCALE = 4X

THERE SHALL BE NO SCRATCHES OR SCRIBE LINES OF ANY KIND ACROSS ANY SEAL SURFACE WHETHER THE DISFIGUREMENT IS WITHIN THE SPECIFIED SURFACE CONDITION OR NOT !! PROTECT ALL SEAL SURFACES FROM NICKS AND SCRATCHES.

REV	DWG	CHK	ZONE	DATE	CHANGES
B	PL / P.L.	RR / R.R.		8-19-93	48X Ø.272/Ø .437 CBORE WAS 24X. 2X .5989 DIM WAS 2X 1.1952. 18.2748 DIM WAS 18.1574. CORRECTED SEAL AREA DESIGNATION.
A	PL	JT		7-22-93	17.750 DIM WAS 17.938.

UNLESS OTHERWISE SPECIFIED
TOLERANCES: .X ± .1 — FRAC. ±1/64; .XX ± .01 — ANGLES ±1°; .XXX ± .005 — FINISH 125
THREADS ARE CLASS 2
CHAMFER ENDS OF ALL SCREW THREADS 30°. CUT 1.5 PITCH THRD RELIEF WITH ROUND NOSE TOOL ON MACHINE CUT THREADS.
BREAK EDGES .016 MAX. ON MACHINED WORK
REMOVE BURRS WELD SPLATTER & LOOSE SCALE
REFERENCES: ANSI Y14.5 & B46.1.

SHOP ORDERS
ACCT. NO. / SERIAL NO. / DATE ISSD. / DATE REQD. / NO. REQD. / DELIVER TO
SURFACE TREATMENT: BRIGHT DIP
IDENT. METH.: TAG
DWG. BY: P. LUFT — DATE 6-30-93
CHK. BY: J. TAYLOR — DATE 7/1/93

LAWRENCE BERKELEY LABORATORY
UNIVERSITY OF CALIFORNIA-BERKELEY

WIMP DETECTOR
ICE BOX PAIL ASSY
LID, CAN, ICE-BOX, LHe

PATENT CLEAR	DWG. TYPE	SHOWN ON	SCALE	DO NOT SCALE PRINTS
	C - D	22G3626	HALF	

MICROFILMED	DESIGN ACCT. NO.	CATEGORY CODE	DWG. NO.	SIZE	REV.
	7916-05		22G3584		B