22G3722	REQD	ITEM	PART NUMBER	DESCRIPTION
			9528-40015	SHEET, CRES, .078 THK

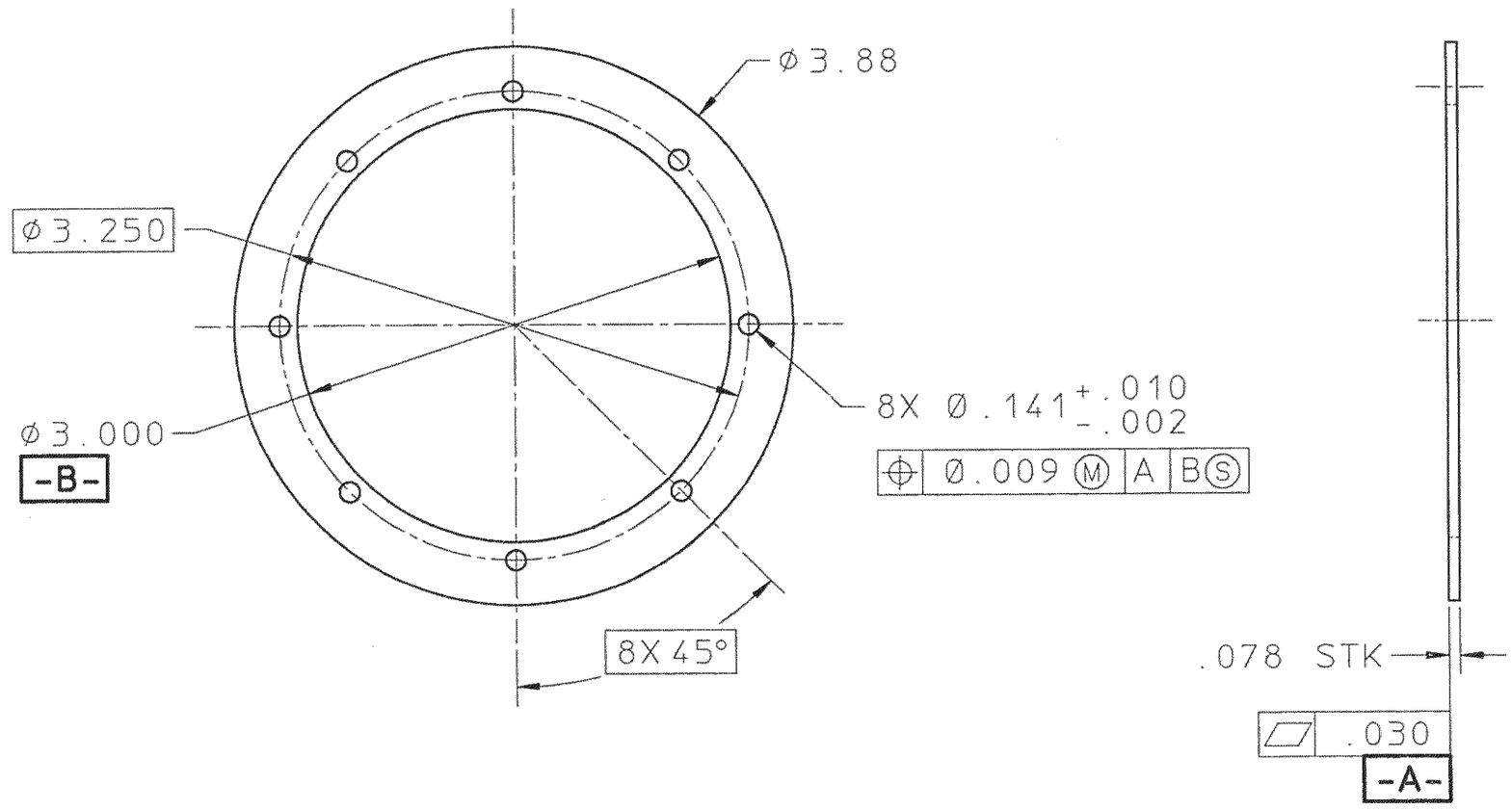

REV	DWN	CHK	DATE	DESCRIPTION

UNLESS OTHERWISE SPECIFIED

TOLERANCE .X ±.1 .XX ± .02 .XXX ±.005

SURFACE FINISH 125 ✓

1. SAWED, FLAMECUT, SHEARED OR CUT STOCK FINISH.
2. THREADS CLASS 2.
3. CHAMFER ENDS OF ALL SCREW THRDS 30°.
4. 1 1/2 PITCH RELIEF WITH ROUND NOSE TOOL ON ALL MACHINE CUT THRDS.
5. BREAK EDGES 1/64 MAX. ON MACHINE WORK.
6. REMOVE BURRS, LOOSE SCALE AND WELD SPLATTER.
7. REF.-USASI OR ASA STDS SECT Y-14 & B46-1.

SHOP ORDERS

ACCT NO | SER NO

DATE ISSD | DATE REQD | NO REQD

DELIVER TO

SURFACE TREATMENT DEGREASE

IDENTIFIC METHOD TAG

DWG BY P. LUFT P.L. DATE 11-3-93

CHK BY J. TAYLOR J.T. DATE 11-10-93

LAWRENCE BERKELEY LABORATORY

UNIVERSITY OF CALIFORNIA-BERKELEY

WIMP DETECTOR

E-STEM ASSY

RING, RETAINING, NTI BRAZEMENT, E-STEM

PAT CLEAR	DWG TYPE	SHOWN ON	SCALE: FULL
	C - D	22G3536	DO NOT SCALE PRINTS
MICROFILMED	DESIGN ACCT NO	CATEGORY CODE	DWG NO 22G3722 REV
M	7916-05		