NOTES:

1. **MAINTAIN STOCK FINISH SCRATCH FREE.**
2. DEBURR HOLES WITH MINIMUM CHAMFER.
3. RETAIN ALL TOOLING FOR PRODUCTION OF ADDITIONAL PARTS.

22G3802	REQD	ITEM	PART NUMBER	DESCRIPTION
				COPPER SHEET, .020 THK, OFE 10100, ANNEALED

IMPORTANT: USE ONLY STOCK APPROVED FOR THE WIMP DETECTOR PROJECT BY JOHN TAYLOR OR ROY OKI.

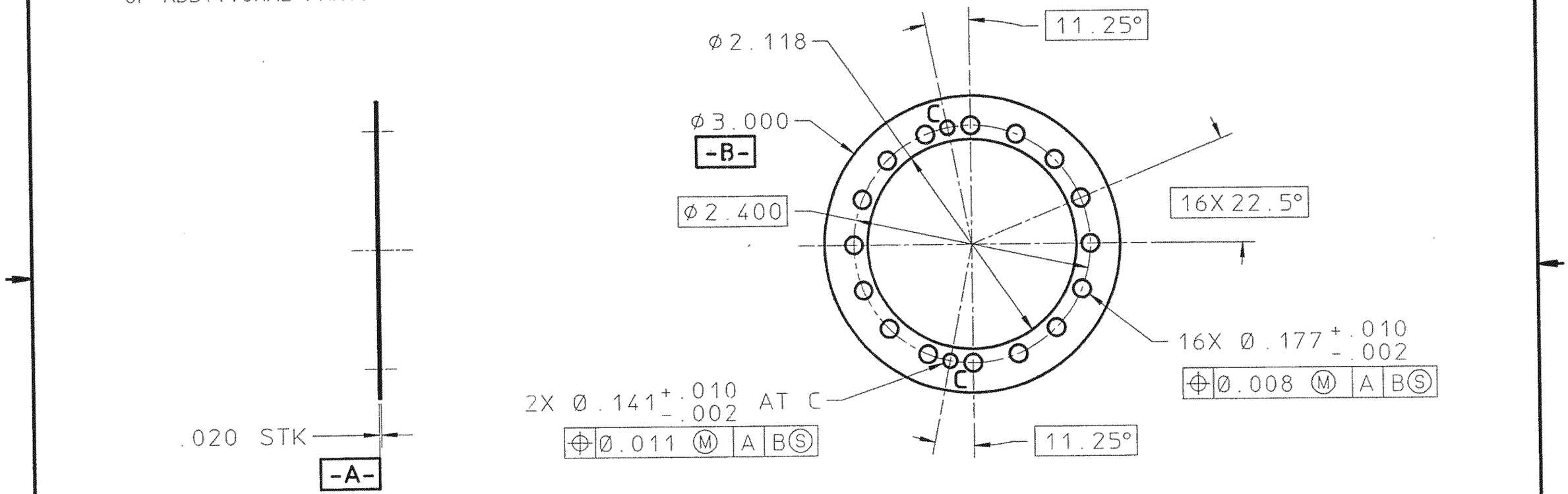

REV	DWN	CHK	DATE	DESCRIPTION

UNLESS OTHERWISE SPECIFIED

TOLERANCE .X ±.1 .XX ± .02 .XXX ±.005

SURFACE FINISH 125 √

1. SAWED, FLAMECUT, SHEARED OR CUT STOCK FINISH.
2. THREADS CLASS 2.
3. CHAMFER ENDS OF ALL SCREW THRDS 30°.
4. 1 [illegible]/2 PITCH RELIEF WITH ROUND NOSE TOOL ON ALL MACHINE CUT THRDS.
5. BREAK EDGES 1/64 MAX. ON MACHINE WORK.
6. REMOVE BURRS, LOOSE SCALE AND WELD SPLATTER.
7. REF [illegible]-USASI OR ASA STDS SECT Y-14 & B46-1.

SHOP ORDERS

ACCT NO	SER NO

DATE ISSD	DATE REQD	NO REQD

DELIVER TO

SURFACE TREATMENT: BRIGHT DIP

IDENTIFIC METHOD: TAG

DWG BY: P. LUFT P.L. DATE 7-20-93

CHK BY: J. TAYLOR J.T. DATE 7-27-93

LAWRENCE BERKELEY LABORATORY
UNIVERSITY OF CALIFORNIA-BERKELEY

WIMP DETECTOR

ICE-BOX ASSY

GASKET, E-PORT, ICE-BOX, LHe

PAT CLEAR	DWG TYPE	SHOWN ON	SCALE: FULL
PC	C - D	22G3626	DO NOT SCALE PRINTS

MICROFILMED	DESIGN ACCT NO	CATEGORY CODE	DWG NO	REV
M	7916-05	PC	22G3802	