REQ	ITEM	PART NUMBER	DESCRIPTION
			COPPER OFE 10100, HARDNESS AS IS

USE ONLY STOCK APPROVED FOR THE W.I.M.P. PROJECT FROM ROY OKI OR JOHN TAYLOR

ETTES:

1. INDICATED RADIUS TO MATCH ID OF ROLL-UP, LN, LBL DWG. 22G2854, PER LBL DWG. 22G2796, CAN, ICE-BOX, LN.

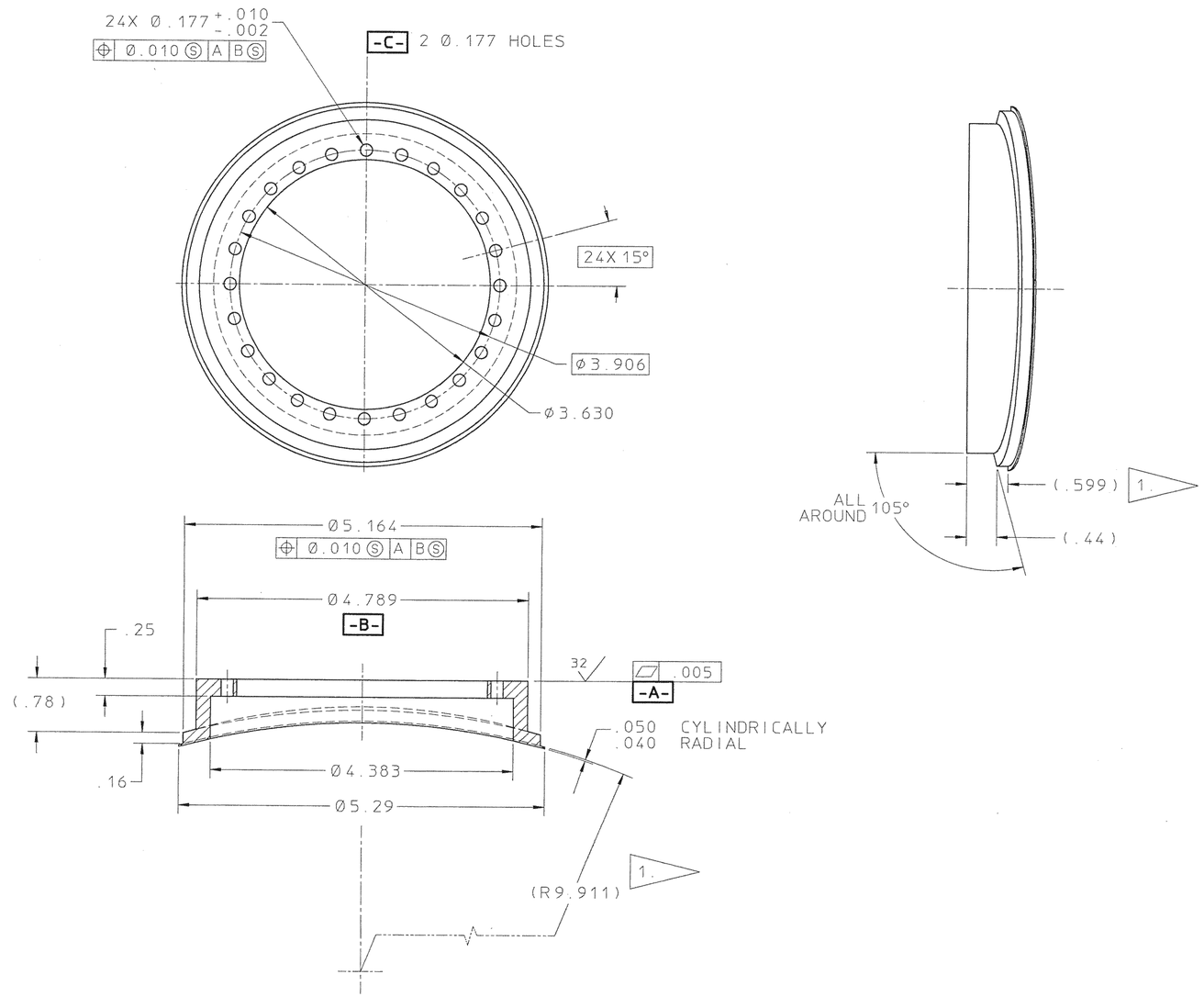

22G3864

REV	DWG	CHK	ZONE	DATE	CHANGES

UNLESS OTHERWISE SPECIFIED

TOLERANCES		
	.X ± .1	FRAC. ± 1/64
	.XX ± .02	ANGLES ± 1°
	.XXX ± .005	FINISH 125√

THREADS ARE CLASS 2
CHAMFER ENDS OF ALL SCREW THREADS 30°.
CUT 1.5 PITCH THRD RELIEF WITH ROUND NOSE TOOL ON MACHINE CUT THREADS.
BREAK EDGES .016 MAX. ON MACHINED WORK
REMOVE BURRS WELD SPLATTER & LOOSE SCALE
REFERENCES: ANSI Y14.5 & B46.1.

SHOP ORDERS

ACCT. NO.		SERIAL NO.
DATE ISSD.	DATE REQD.	NO. REQD.
DELIVER TO		
SURFACE TREATMENT	BRIGHT DIP	
IDENT. METH.	TAG	
DWG. BY	P. LUFT PL.	DATE 6-27-93
CHK. BY	R. WOLGAST RW	DATE 6-29-93

LAWRENCE BERKELEY LABORATORY
UNIVERSITY OF CALIFORNIA-BERKELEY

WIMP DETECTOR
CAN, ICE-BOX, LN
FLANGE, F-STEM, ICE-BOX, LN

PATENT CLEAR	DWG. TYPE	SHOWN ON	SCALE	DO NOT SCALE PRINTS
	C - D	22G3316	FULL	
MICROFILMED	DESIGN ACCT. NO.	CATEGORY CODE	DWG. NO.	SIZE / REV.
M	7916-05		22G3864	