REQ	ITEM	PART NUMBER	DESCRIPTION
			COPPER OFE 10100, HARDNESS AS IS

USE ONLY STOCK APPROVED FOR THE W.I.M.P. PROJECT FROM ROY OKI OR JOHN TAYLOR

NOTES:

1. INDICATED RADIUS TO MATCH ID OF ROLL-UP, LBL DWG. 22G2864, PER LBL DWG. 22G3316, CAN, ICE-BOX, LHe.
2. THERE SHALL BE NO SCRATCHES OR SCRIBE LINES OF ANY KIND ACROSS ANY SEAL SURFACE WHETHER THE DISFIGUREMENT IS WITHIN THE SPECIFIED SURFACE CONDITION OR NOT !! PROTECT ALL SEAL SURFACES FROM NICKS AND SCRATCHES.

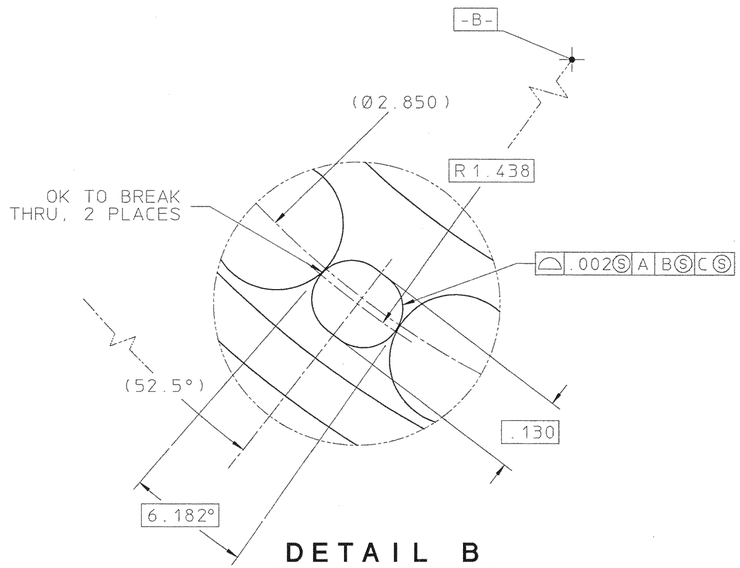

DETAIL B

3 PLACES AT C
SCALE = 8X

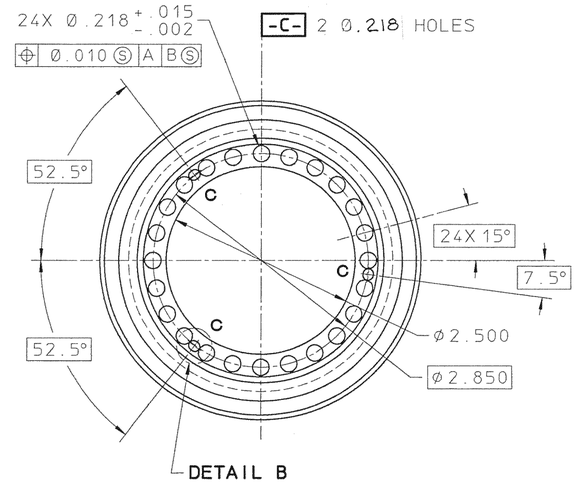

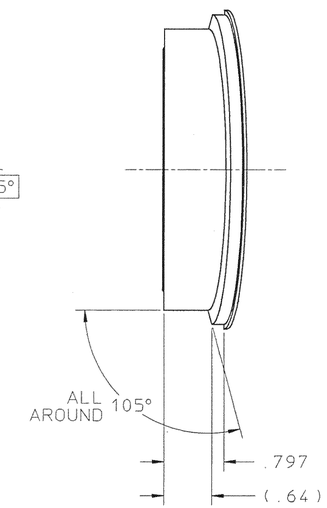

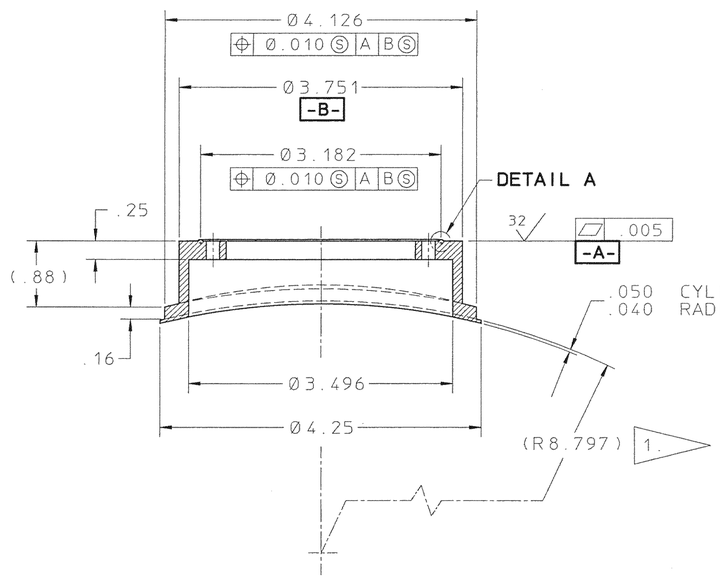

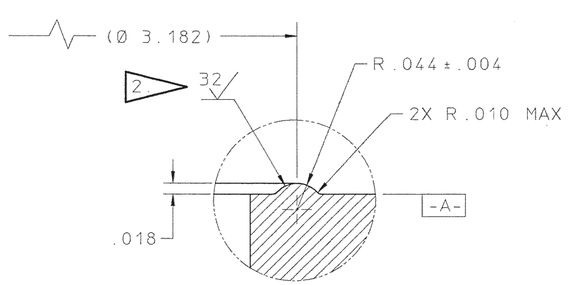

DETAIL A

SCALE = 8X

22G3884

REV	DWG	CHK	ZONE	DATE	CHANGES

UNLESS OTHERWISE SPECIFIED

TOLERANCES		
	.X ± .1	FRAC. ±1/64
	.XX ± .02	ANGLES ± 1°
	.XXX ± .005	FINISH 125

THREADS ARE CLASS 2
CHAMFER ENDS OF ALL SCREW THREADS 30°.
CUT 1.5 PITCH THRD RELIEF WITH ROUND NOSE TOOL ON MACHINE CUT THREADS.
BREAK EDGES .016 MAX. ON MACHINED WORK
REMOVE BURRS WELD SPLATTER & LOOSE SCALE
REFERENCES: ANSI Y14.5 & B46.1.

SHOP ORDERS

ACCT. NO.		SERIAL NO.	
DATE ISSD	DATE REQD.	NO. REQD.	
DELIVER TO			
SURFACE TREATMENT	BRIGHT DIP		
IDENT. METH.	TAG		
DWG. BY	P. LUFT	DATE	6-16-93
CHK. BY	R. WOLGAST R.W.	DATE	6-24-93

LAWRENCE BERKELEY LABORATORY
UNIVERSITY OF CALIFORNIA-BERKELEY

WIMP DETECTOR
CAN, ICE-BOX, LHe
FLANGE, F-STEM, ICE-BOX, LHe

PATENT CLEAR	DWG. TYPE	SHOWN ON	SCALE	DO NOT SCALE PRINTS
	C - D	22G3316	FULL	
MICROFILMED	DESIGN ACCT. NO.	CATEGORY CODE	DWG. NO.	SIZE / REV.
	7916-05		22G3884	