REQ	ITEM	PART NUMBER	DESCRIPTION
(1)	1		(FLANGE) COPPER OFE 10100, HARDNESS AS IS
(2)	2		(DOWEL PIN) BRASS

USE ONLY STOCK APPROVED FOR THE W.I.M.P. PROJECT FROM ROY OKI OR JOHN TAYLOR

NOTES:

1. INDICATED RADIUS TO MATCH ID OF ROLL-UP, LBL DWG. 22G2864, PER LBL DWG. 22G3316, CAN, ICE-BOX, LHe.
2. THERE SHALL BE NO SCRATCHES OR SCRIBE LINES OF ANY KIND ACROSS ANY SEAL SURFACE WHETHER THE DISFIGUREMENT IS WITHIN THE SPECIFIED SURFACE CONDITION OR NOT !! PROTECT ALL SEAL SURFACES FROM NICKS AND SCRATCHES.

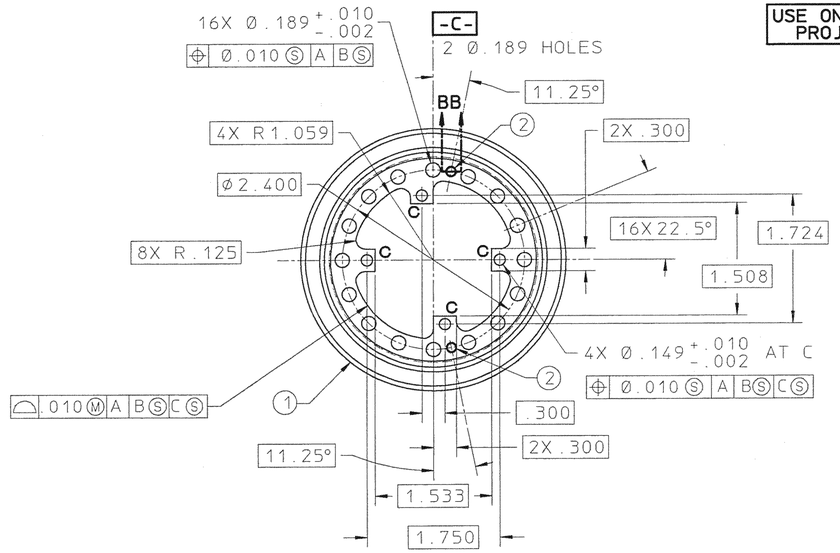

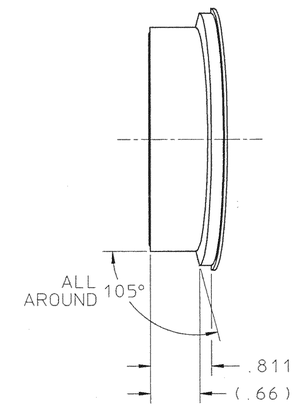

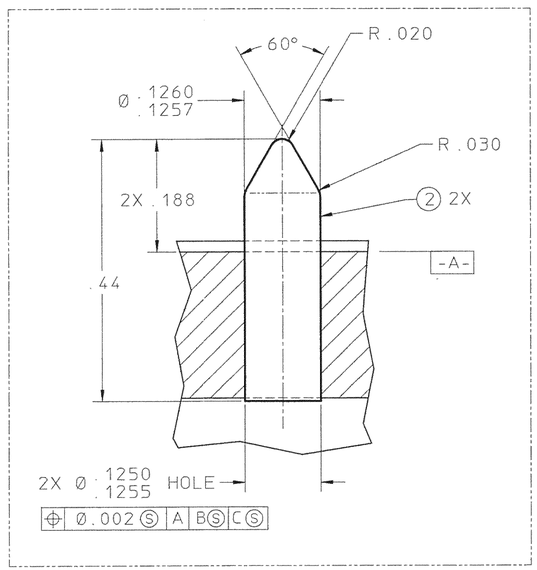

SECTION B–B

SCALE = 8X

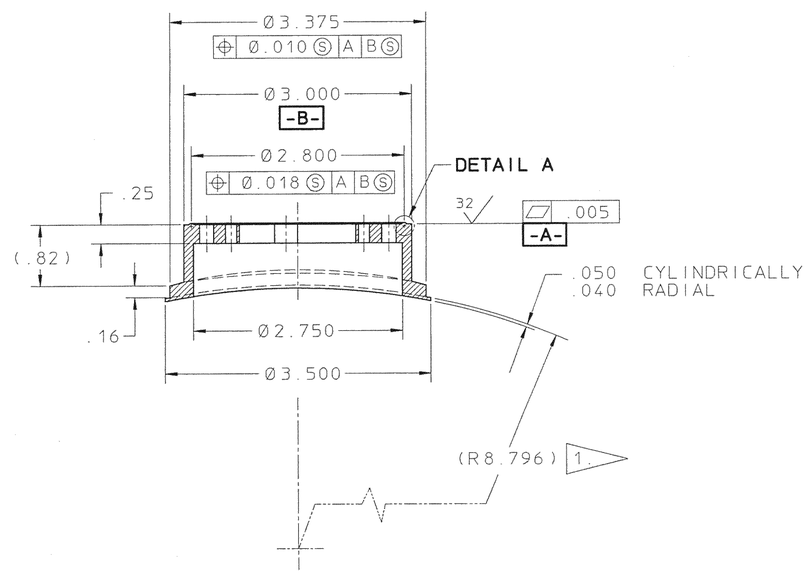

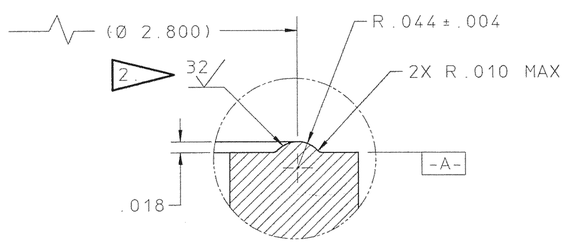

DETAIL A

SCALE = 8X

22G3894

REV	DWG	CHK	ZONE	DATE	CHANGES

UNLESS OTHERWISE SPECIFIED
TOLERANCES: .X ± .1 FRAC. ±1/64; .XX ± .02 ANGLES ±1°; .XXX ± .005 FINISH 125√
THREADS ARE CLASS 2
CHAMFER ENDS OF ALL SCREW THREADS 30°.
CUT 1.5 PITCH THRD RELIEF WITH ROUND NOSE TOOL ON MACHINE CUT THREADS.
BREAK EDGES .016 MAX. ON MACHINED WORK.
REMOVE BURRS WELD SPLATTER & LOOSE SCALE
REFERENCES: ANSI Y14.5 & B46.1.

SHOP ORDERS
ACCT. NO. | SERIAL NO.
DATE ISSD | DATE REQD. | NO. REQD.
DELIVER TO
SURFACE TREATMENT BRIGHT DIP
IDENT. METH. TAG
DWG. BY P. LUFT P.L. DATE 6-16-93
CHK. BY R. WOLGAST R.W. DATE 6-24-93

LAWRENCE BERKELEY LABORATORY
UNIVERSITY OF CALIFORNIA-BERKELEY

WIMP DETECTOR
CAN, ICE-BOX, LHe
FLANGE, E-STEM, ICE-BOX, LHe

PATENT CLEAR	DWG. TYPE	SHOWN ON	SCALE	DO NOT SCALE PRINTS
	C - D	22G3316	FULL	
MICROFILMED	DESIGN ACCT. NO.	CATEGORY CODE	DWG. NO. 22G3894	SIZE / REV.
	7916-05			