22G3982	REQD	ITEM	PART NUMBER	DESCRIPTION
				COPPER PLATE, .250 THK, OFE 10100, 1/8 HARD

IMPORTANT: USE ONLY STOCK APPROVED FOR THE WIMP DETECTOR PROJECT BY JOHN TAYLOR OR ROY OKI.

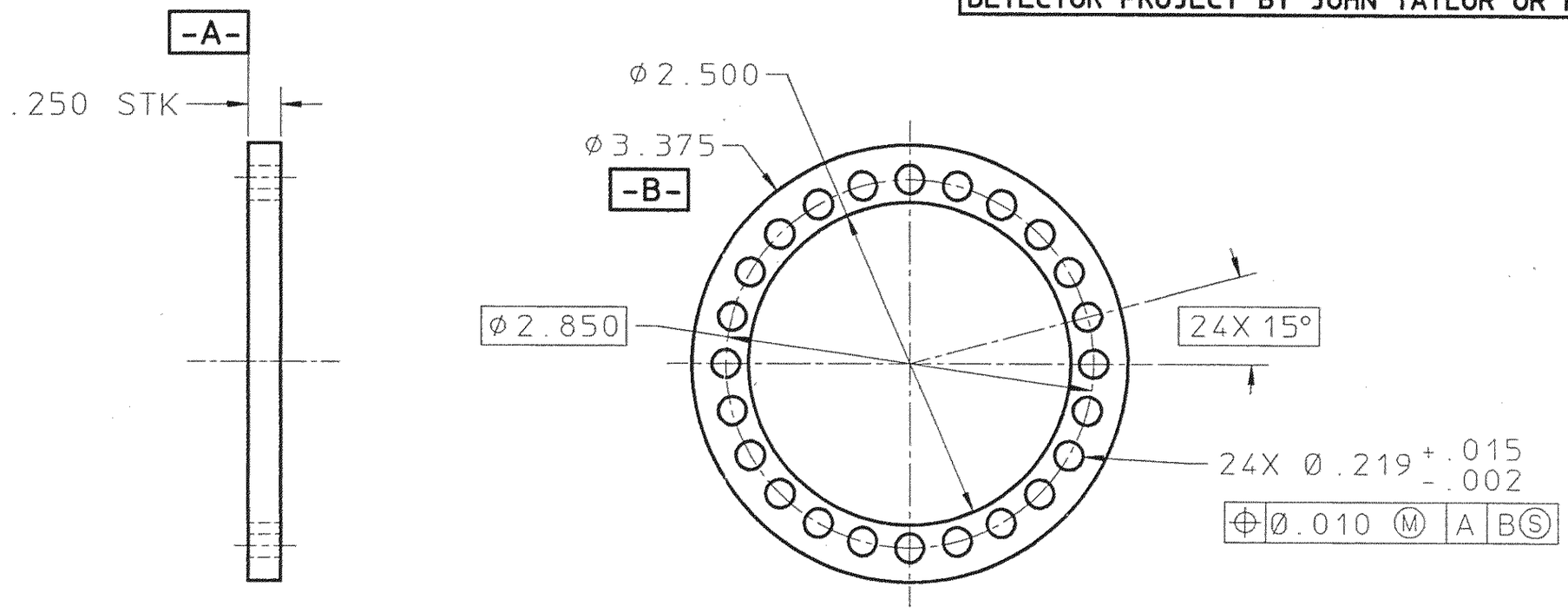

REV	DWN	CHK	DATE	DESCRIPTION

UNLESS OTHERWISE SPECIFIED
TOLERANCE .X ±.1 .XX ± .02 .XXX ±.005
SURFACE FINISH 125 √

1. SAWED, FLAMECUT, SHEARED OR CUT STOCK FINISH.
2. THREADS CLASS 2.
3. CHAMFER ENDS OF ALL SCREW THRDS 30°.
4. 1 1/2 PITCH RELIEF WITH ROUND NOSE TOOL ON ALL MACHINE CUT THRDS.
5. BREAK EDGES 1/64 MAX. ON MACHINE WORK.
6. REMOVE BURRS, LOOSE SCALE AND WELD SPLATTER.
7. REF.-USASI OR ASA STDS SECT Y-14 & B46-1.

SHOP ORDERS

ACCT NO	SER NO	
DATE ISSD	DATE REQD	NO REQD
DELIVER TO		
SURFACE TREATMENT	BRIGHT DIP	
IDENTIFIC METHOD	TAG	
DWG BY	P. LUFT P.L.	DATE 7-20-93
CHK BY	J. TAYLOR J.T.	DATE 7.27.93

LAWRENCE BERKELEY LABORATORY
UNIVERSITY OF CALIFORNIA-BERKELEY

WIMP DETECTOR
ICE-BOX ASSY
RING, BACK-UP, F-PORT, LHe

PAT CLEAR	DWG TYPE	SHOWN ON	SCALE: FULL
PC	C - D	22G3626	DO NOT SCALE PRINTS
MICROFILMED	DESIGN ACCT NO	CATEGORY CODE	DWG NO / REV
M	7916-05		22G3982