REQ	ITEM	PART NUMBER	DESCRIPTION
		9528-10662	PLATE, CRES, 304, 1/2 THK

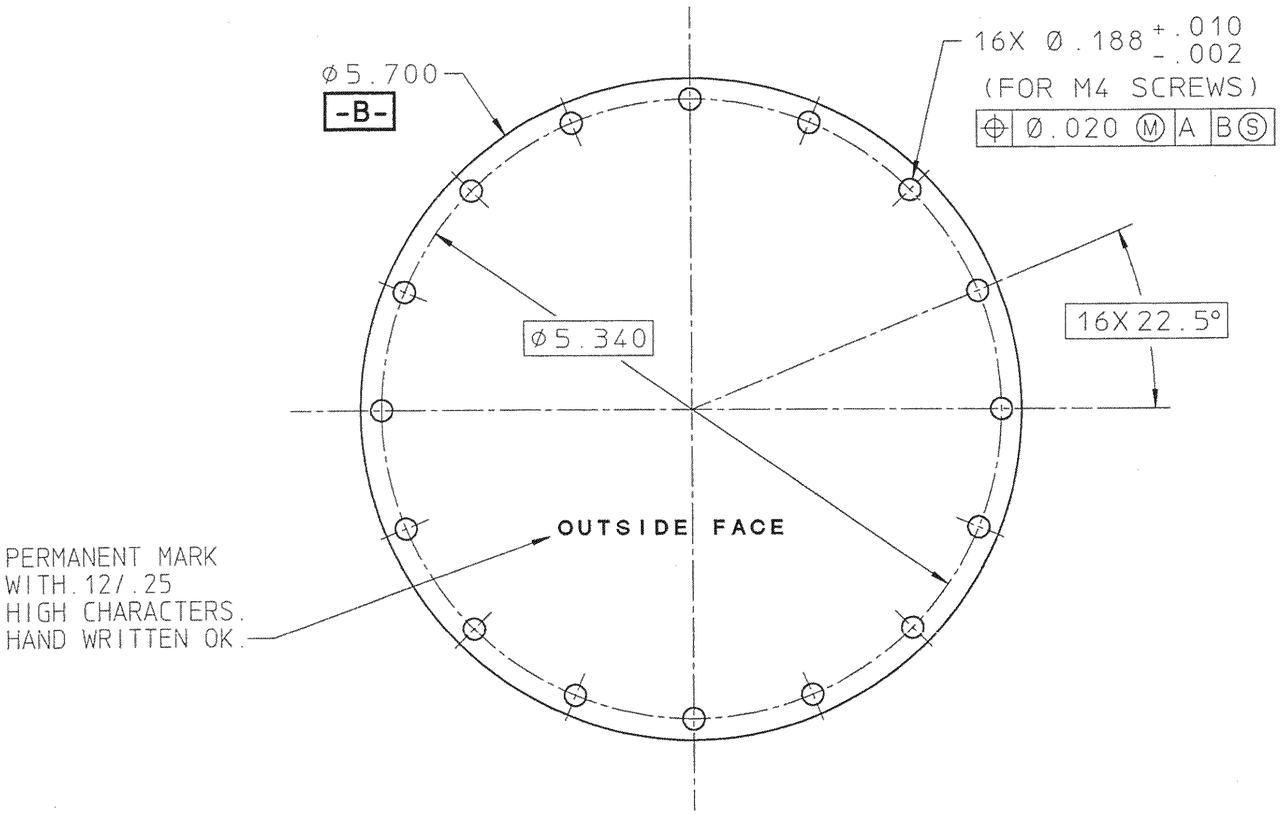

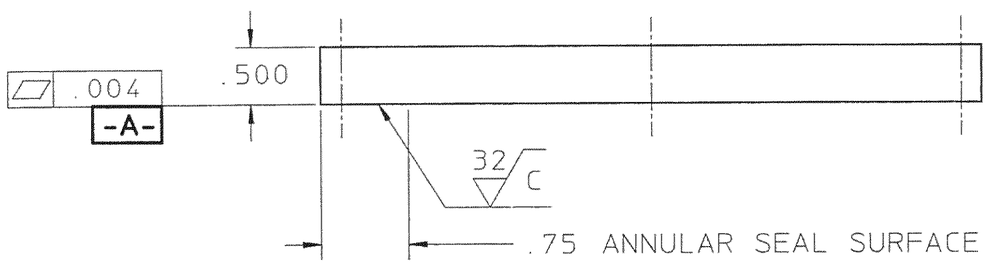

THERE SHALL BE NO SCRATCHES OR SCRIBE LINES
OF ANY KIND ACROSS ANY SEAL SURFACE WHETHER
THE DISFIGUREMENT IS WITHIN THE SPECIFIED
SURFACE CONDITION OR NOT !!
PROTECT ALL SEAL SURFACES FROM NICKS AND SCRATCHES.

22G3993

REV	DWG	CHK	ZONE	DATE	CHANGES

UNLESS OTHERWISE SPECIFIED

TOLERANCES			
.X ± .1	FRAC. ±1/64		
.XX ± .01	ANGLES ±1°		
.XXX ± .005	FINISH 63		

THREADS ARE CLASS 2
CHAMFER ENDS OF ALL SCREW THREADS 30°.
CUT 1.5 PITCH THRD RELIEF WITH ROUND NOSE TOOL
ON MACHINE CUT THREADS.
BREAK EDGES .016 MAX. ON MACHINED WORK
REMOVE BURRS WELD SPLATTER & LOOSE SCALE
REFERENCES: ANSI Y14.5 & B46.1.

SHOP ORDERS

ACCT. NO.		SERIAL NO.	
DATE ISSD	DATE REQD.	NO. REQD.	
DELIVER TO			
SURFACE TREATMENT	DEGREASE		
IDENT. METH.	TAG		
DWG. BY	P. LUFT P.A.L.	DATE	5-20-93
CHK. BY	R. WOLGAST R.W.	DATE	5-21-93

LAWRENCE BERKELEY LABORATORY
UNIVERSITY OF CALIFORNIA-BERKELEY

WIMP DETECTOR
ICE-BOX PAIL ASSY
FLANGE, BLANK-OFF, ICE-BOX, OVC

PATENT	DWG. TYPE	SHOWN ON	SCALE	DO NOT SCALE PRINTS
CLEAR	C - D	22G3626	FULL	

MICROFILMED	DESIGN ACCT. NO.	CATEGORY CODE	DWG. NO.	SIZE	REV.
M	7916-05		22G3993		