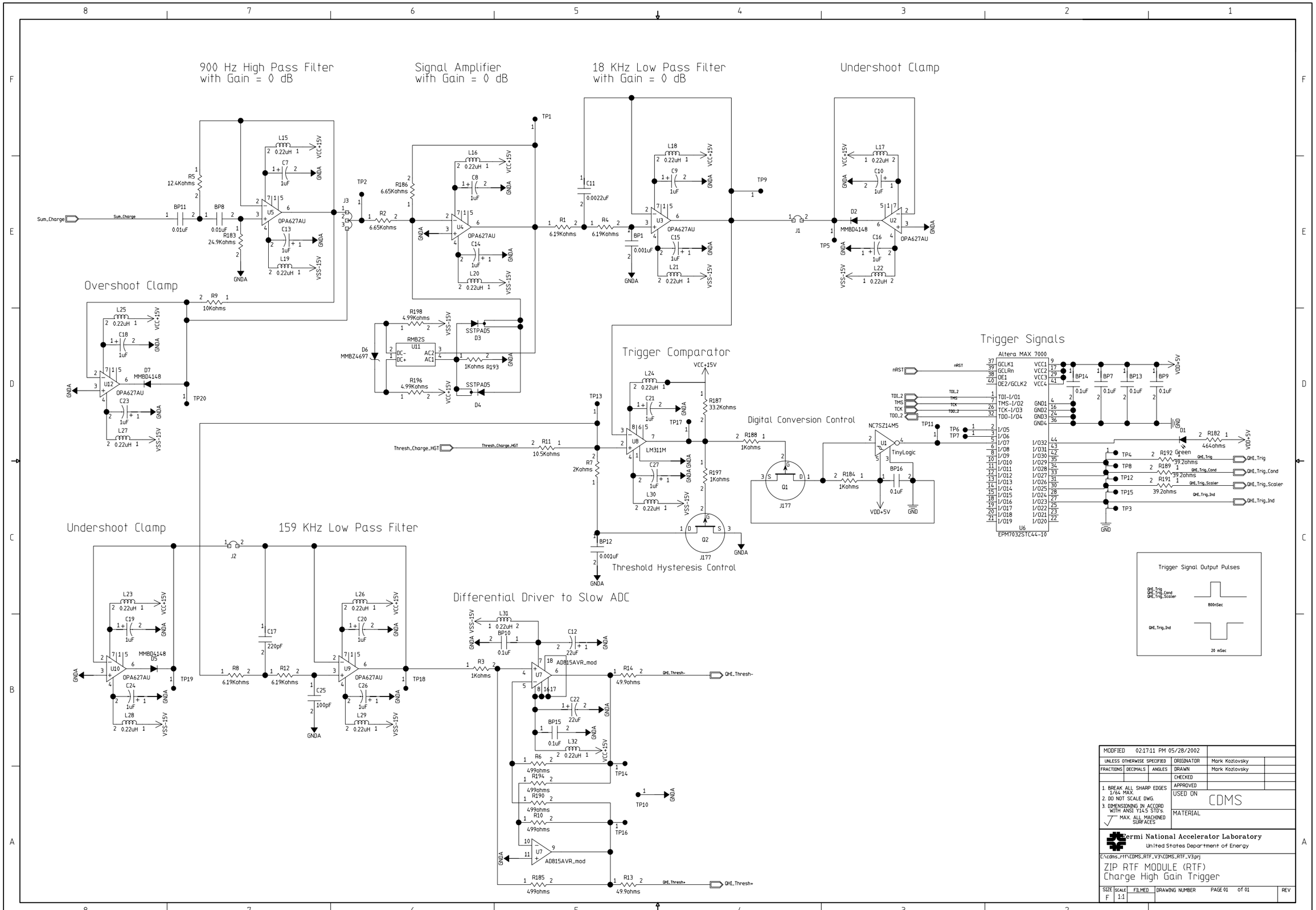
900 Hz High Pass Filter
with Gain = 0 dB
Signal Amplifier
with Gain = 0 dB
18 KHz Low Pass Filter
with Gain = 0 dB
Undershoot Clamp
Overshoot Clamp
Trigger Comparator
Trigger Signals
Digital Conversion Control
Threshold Hysteresis Control
Undershoot Clamp
159 KHz Low Pass Filter
Differential Driver to Slow ADC
Trigger Signal Output Pulses
800nSec
20 mSec
Sum_Charge
Thresh_Charge_HGT
QHI_Thresh-
QHI_Thresh+
QHI_Trig
QHI_Trig_Cond
QHI_Trig_Scaler
QHI_Trig_Ind
OPA627AU
LM311M
NC7SZ14M5
TinyLogic
Altera MAX 7000
EPM7032STC44-10
AD815AVR_mod
MMBD4148
MMBZ4697
SSTPAD5
RMB2S
J177
J1
J2
J3
TP1
TP2
TP3
TP4
TP5
TP6
TP7
TP8
TP9
TP10
TP11
TP12
TP13
TP14
TP15
TP16
TP17
TP18
TP19
TP20
GNDA
VCC+15V
VSS-15V
VDD+5V
GND
MODFIED 02:17:11 PM 05/28/2002
UNLESS OTHERWISE SPECIFIED
FRACTIONS DECIMALS ANGLES
ORIGINATOR Mark Kozlovsky
DRAWN Mark Kozlovsky
CHECKED
APPROVED
1. BREAK ALL SHARP EDGES 1/64 MAX.
2. DO NOT SCALE DWG.
3. DIMENSIONING IN ACCORD WITH ANSI Y14.5 STD'S.
MAX. ALL MACHINED SURFACES
USED ON CDMS
MATERIAL
Fermi National Accelerator Laboratory
United States Department of Energy
C:\cdms_rtf\CDMS_RTF_V3\CDMS_RTF_V3.prj
ZIP RTF MODULE (RTF)
Charge High Gain Trigger
SIZE F
SCALE 1:1
FILMED
DRAWING NUMBER
PAGE 01 of 01
REV
M:8ND; V:6LA