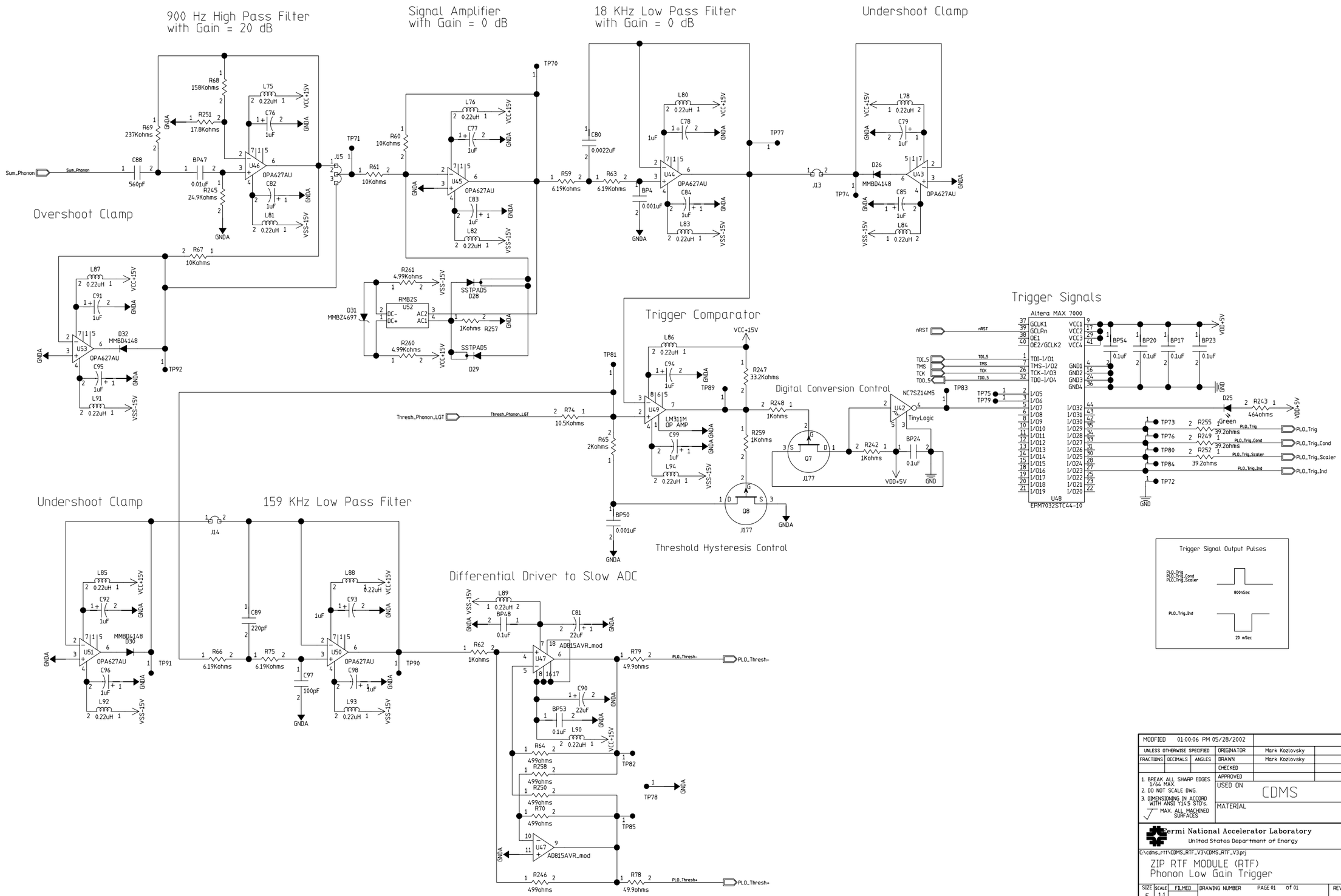

MODIFIED 01:00:06 PM 05/28/2002			
UNLESS OTHERWISE SPECIFIED		ORIGINATOR	Mark Kozlovsky
FRACTIONS	DECIMALS	ANGLES	DRAWN Mark Kozlovsky
			CHECKED
			APPROVED
1. BREAK ALL SHARP EDGES 1/64 MAX. 2. DO NOT SCALE DWG. 3. DIMENSIONING IN ACCORD WITH ANSI Y14.5 STD's.			USED ON CDMS
✓ MAX ALL MACHINED SURFACES			MATERIAL

Fermi National Accelerator Laboratory
United States Department of Energy

C:\cdms_rtf\CDMS_RTF_V3\CDMS_RTF_V3.prj

ZIP RTF MODULE (RTF)
Phonon Low Gain Trigger

SIZE	SCALE	FILMED	DRAWING NUMBER	PAGE 01 of 01	REV
F	1:1				

H:BND: V:6LA