Filter = 500kHz
Gain = 6 dB
Av = 2

Offset Compensation

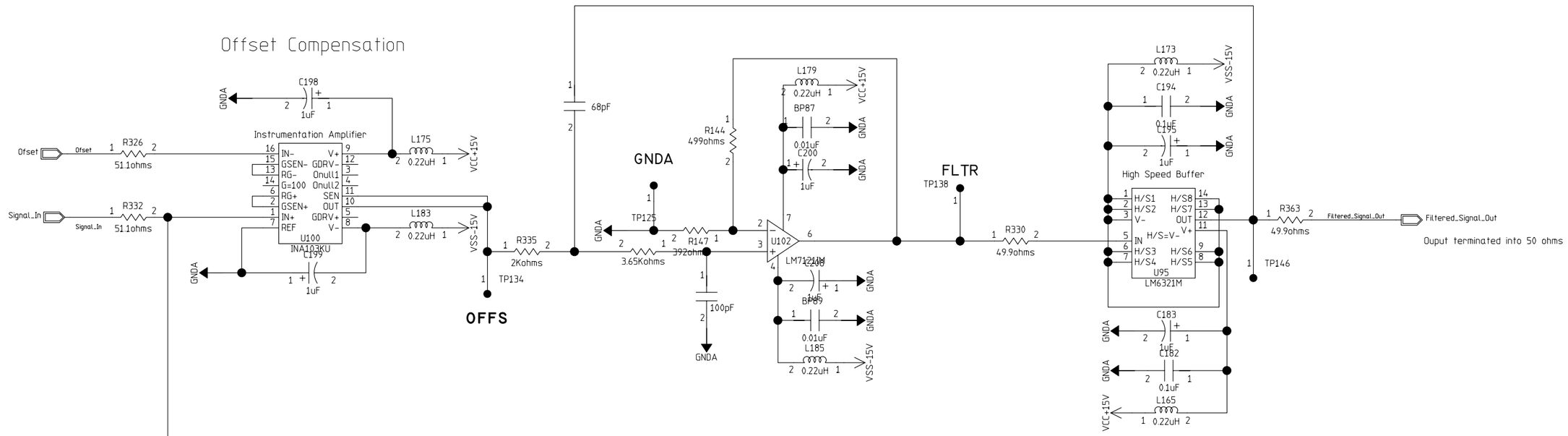

Unfiltered Signal Buffer with Gain = 6 dB, Av = 2

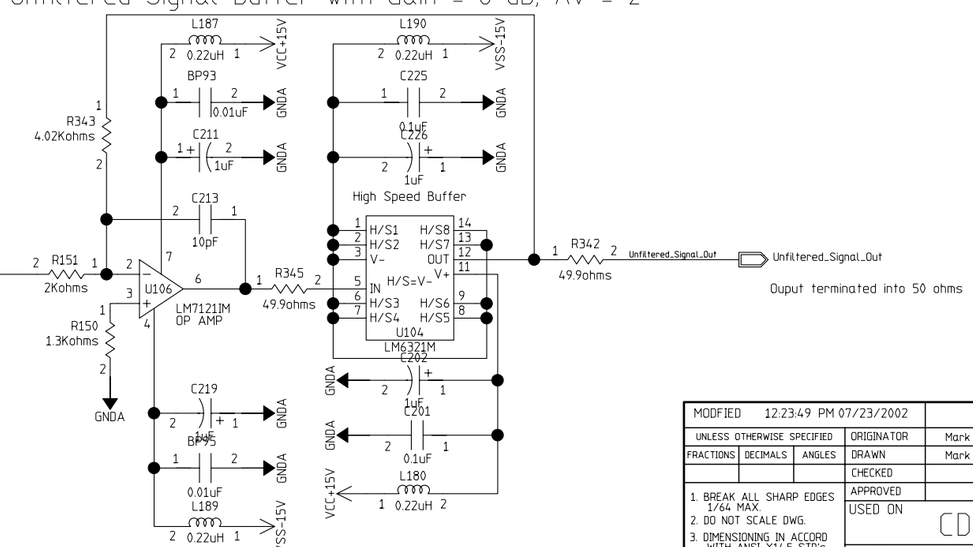

PHYSICS SIGNAL TEST POINTS CONFIGURATION

- OFFS
- FLTR
- GNDA

Phonon C

MODIFIED 12:23:49 PM 07/23/2002				
UNLESS OTHERWISE SPECIFIED			ORIGINATOR	Mark Kozlovsky
FRACTIONS	DECIMALS	ANGLES	DRAWN	Mark Kozlovsky
			CHECKED	
			APPROVED	

1. BREAK ALL SHARP EDGES 1/64 MAX.
2. DO NOT SCALE DWG.
3. DIMENSIONING IN ACCORD WITH ANSI Y14.5 STD's.

MAX. ALL MACHINED SURFACES

USED ON CDMS

MATERIAL

Fermi National Accelerator Laboratory
United States Department of Energy

C:\cdms_rtf\CDMS_RTF_V3\CDMS_RTF_V3.prj

ZIP RTF MODULE (RTF)
Physics Signals Channel

SIZE	SCALE	FILMED	DRAWING NUMBER	PAGE 01 of 01	REV
D	1:1				A

H=8ND; V=4LA