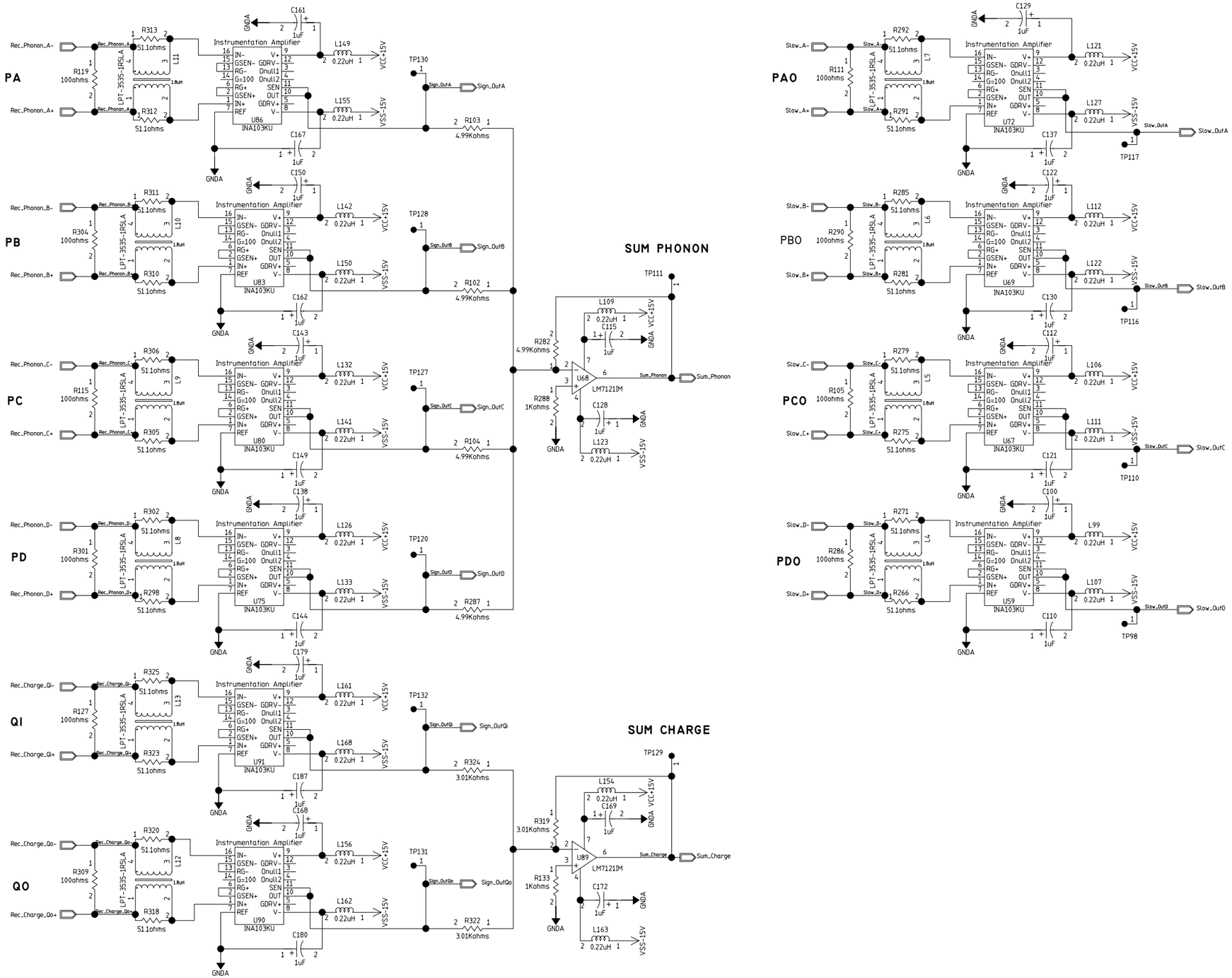

MODIFIED 12:18:44 PM 07/23/2002				
UNLESS OTHERWISE SPECIFIED		ORIGINATOR	Mark Kozlovsky	
FRACTIONS	DECIMALS	ANGLES	DRAWN	Mark Kozlovsky
			CHECKED	
			APPROVED	

1. BREAK ALL SHARP EDGES 1/64 MAX.
2. DO NOT SCALE DWG.
3. DIMENSIONING IN ACCORD WITH ANSI Y14.5 STD's.

√ MAX. ALL MACHINED SURFACES

USED ON CDMS

MATERIAL

Fermi National Accelerator Laboratory
United States Department of Energy

C:\cdms_rtf\CDMS_RTF_V3\CDMS_RTF_V3.prj

ZIP RTF MODULE (RTF)
Signal Receivers

SIZE	SCALE	FILMED	DRAWING NUMBER	PAGE 01 of 01	REV
F	1:1				

H:BND: V:6LA