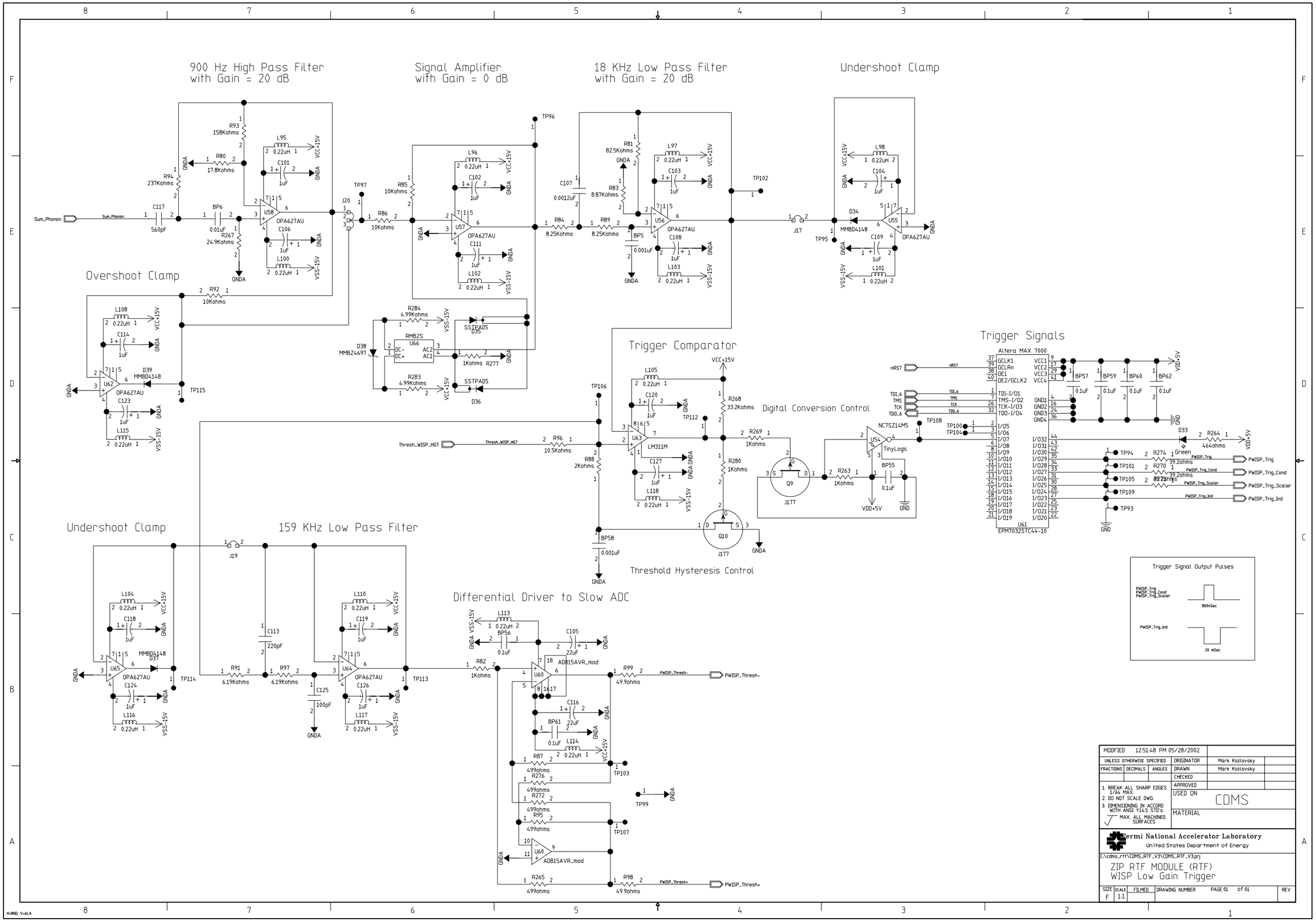
900 Hz High Pass Filter with Gain = 20 dB
Signal Amplifier with Gain = 0 dB
18 KHz Low Pass Filter with Gain = 20 dB
Undershoot Clamp
Overshoot Clamp
Trigger Comparator
Digital Conversion Control
Trigger Signals
Altera MAX 7000
Threshold Hysteresis Control
Undershoot Clamp
159 KHz Low Pass Filter
Differential Driver to Slow ADC
Trigger Signal Output Pulses
PWISP_Trig
PWISP_Trig_Cond
PWISP_Trig_Scaler
800nSec
PWISP_Trig_Ind
20 mSec
MODIFIED 12:51:48 PM 05/28/2002
UNLESS OTHERWISE SPECIFIED
FRACTIONS DECIMALS ANGLES
ORIGINATOR Mark Kozlovsky
DRAWN Mark Kozlovsky
CHECKED
APPROVED
USED ON CDMS
MATERIAL
1. BREAK ALL SHARP EDGES 1/64 MAX.
2. DO NOT SCALE DWG.
3. DIMENSIONING IN ACCORD WITH ANSI Y14.5 STD's.
MAX ALL MACHINED SURFACES
Fermi National Accelerator Laboratory
United States Department of Energy
C:\cdms_rtf\CDMS_RTF_V3\CDMS_RTF_V3.prj
ZIP RTF MODULE (RTF)
WISP Low Gain Trigger
SIZE F SCALE 1:1 FILMED DRAWING NUMBER PAGE 01 of 01 REV