REV.	DESCRIPTION	DRAWN	DATE
		APPD.	DATE

P1	WIRE COLOR	BELDEN PART #
A	RED	9908 2
B	BLACK	9908 10
C	WHITE	9908 9
D	BLACK	9908 10
E	YELLOW	9908 4
F	BLACK	9908 10

P2	WIRE COLOR	BELDEN PART #
A	RED	9908 2
B	BLACK	9908 10
C	WHITE	9908 9
D	BLACK	9908 10
E	YELLOW	9908 4
F	BLACK	9908 10

CONN.	AMPHENOL PART #
P1	MS3106A 24 10 PW
P2	MS3106A 24 10 P
STRAIN RELIEF	97-3057-1016

TERMINALS	AMP PART #
T1–T12	324082

CABLE 1
ITEM #2a.b ON FERMILAB DRAWING XXXX–EE–387319

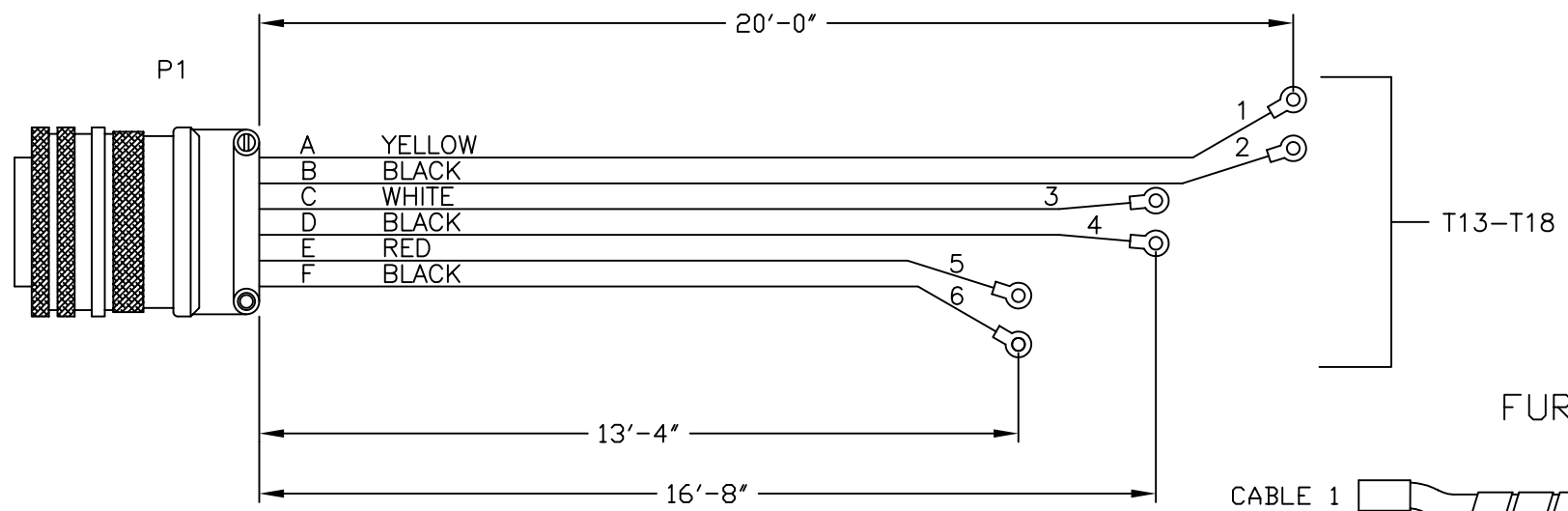

ZIP CRATE
POWER SUPPLY
END

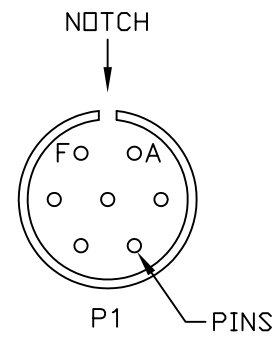

FURNISHED ASSEMBLY

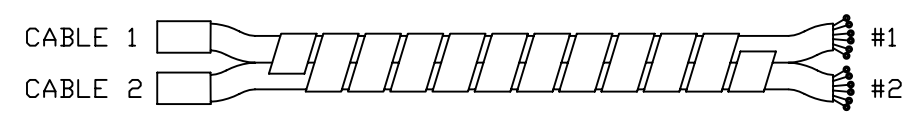

WRAP 2 CABLE ASSEMBLIES TOGETHER
WITH 1/2" O.D. SPIRAL CUT CABLE WRAP
12-14 TURNS PER FOOT.

FILTER
END

CABLE 2
ITEM 2b.b ON FERMILAB DRAWING XXXX–EE–387319

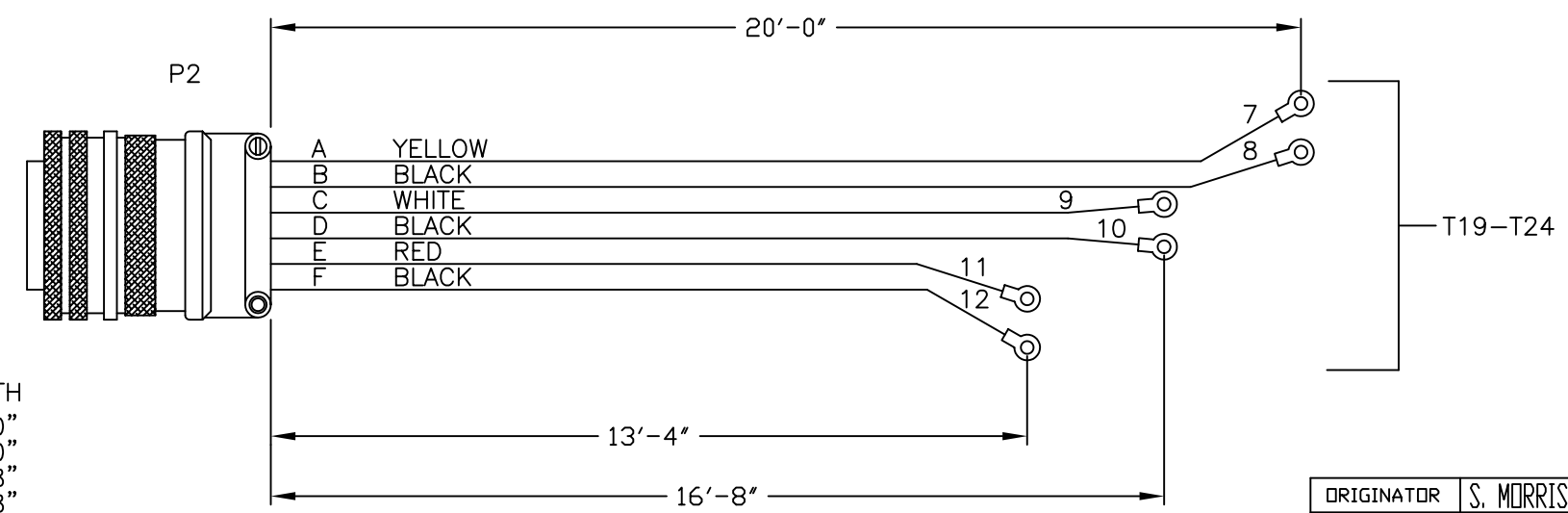

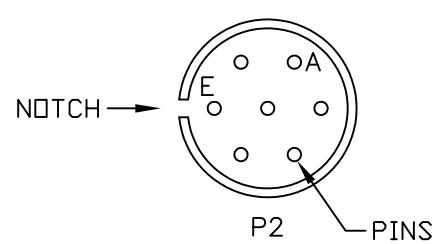

WIRE #	COLOR	FUNCTION	LENGTH
1	YELLOW	POS AN+	20'–0"
2	BLACK	POS AN–	20'–0"
3	WHITE	NEG AN–	16'–8"
4	BLACK	NEG AN+	16'–8"
5	RED	DIG+	13'–4"
6	BLACK	DIG–	13'–4"
7	YELLOW	POS FE+	20'–0"
8	BLACK	POS FE–	20'–0"
9	WHITE	NEG FE–	16'–8"
10	BLACK	NEG FE+	16'–8"
11	RED	HTR+	13'–4"
12	BLACK	HTR–	13'–4"

ORIGINATOR	S. MORRISON	9/28/01	CHECKED		
DRAWN	N. CUNY	9/28/01	APPROVED		

FERMI NATIONAL ACCELERATOR LABORATORY
UNITED STATES DEPARTMENT OF ENERGY

PPD/ETT/ES (CDMS) ZIP POWER SUPPLY TO LINDGREN DC POWER CABLE

SCALE	SOFTWARE	DRAWING NUMBER	REV.
NONE	AUTOCAD	~~6008-MC-173253~~	