POWER ON SEQUENCER CONTINUED

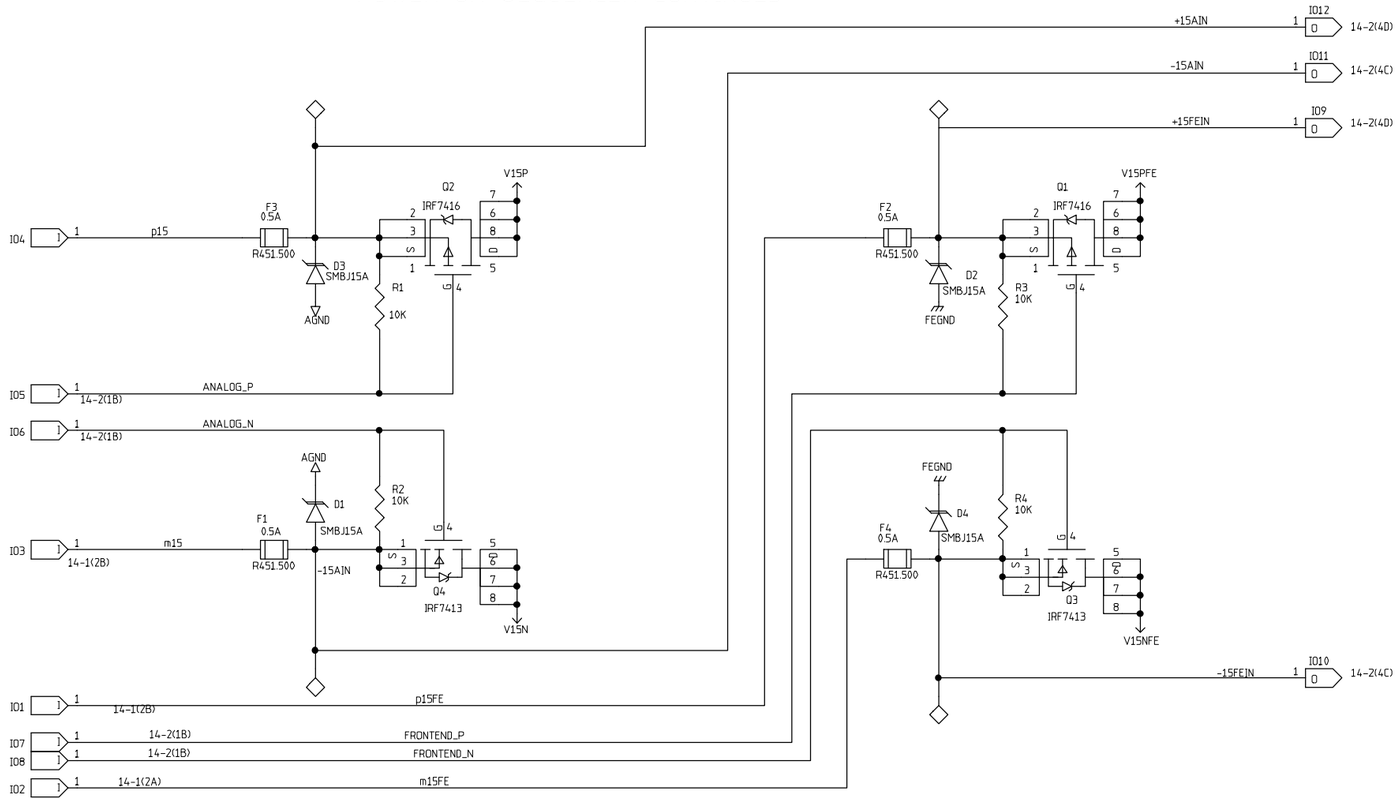

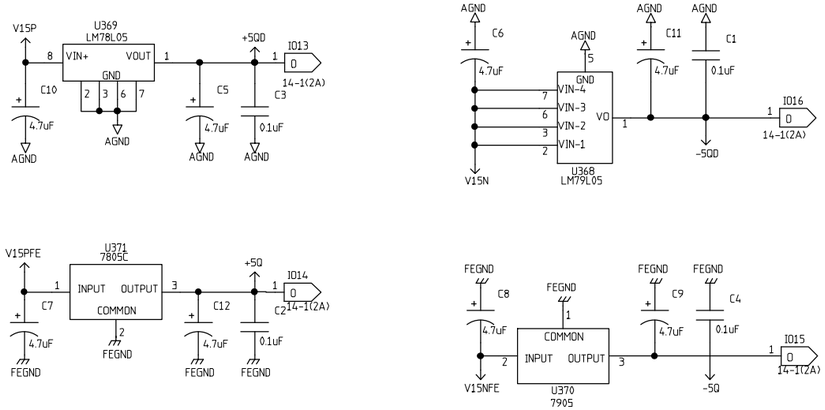

REVISIONS			
REV	DESCRIPTION	DATE	APPROVED

	NAME	DATE
ORIGINATOR	MERLE HALDEMAN	11/18/98
DRAWN	BRUCE MERKEL	11/18/98
CHECKED	TOM CRENNA	1/8/99
APPROVED		

FERMILAB PPD/ETT/ES CDMS (E-891)
ZIP MODULE
15 VOLT SECTION

SIZE	FSCM NO.	DWG. NO.	REV
C			
SCALE		SHEET 14-3	

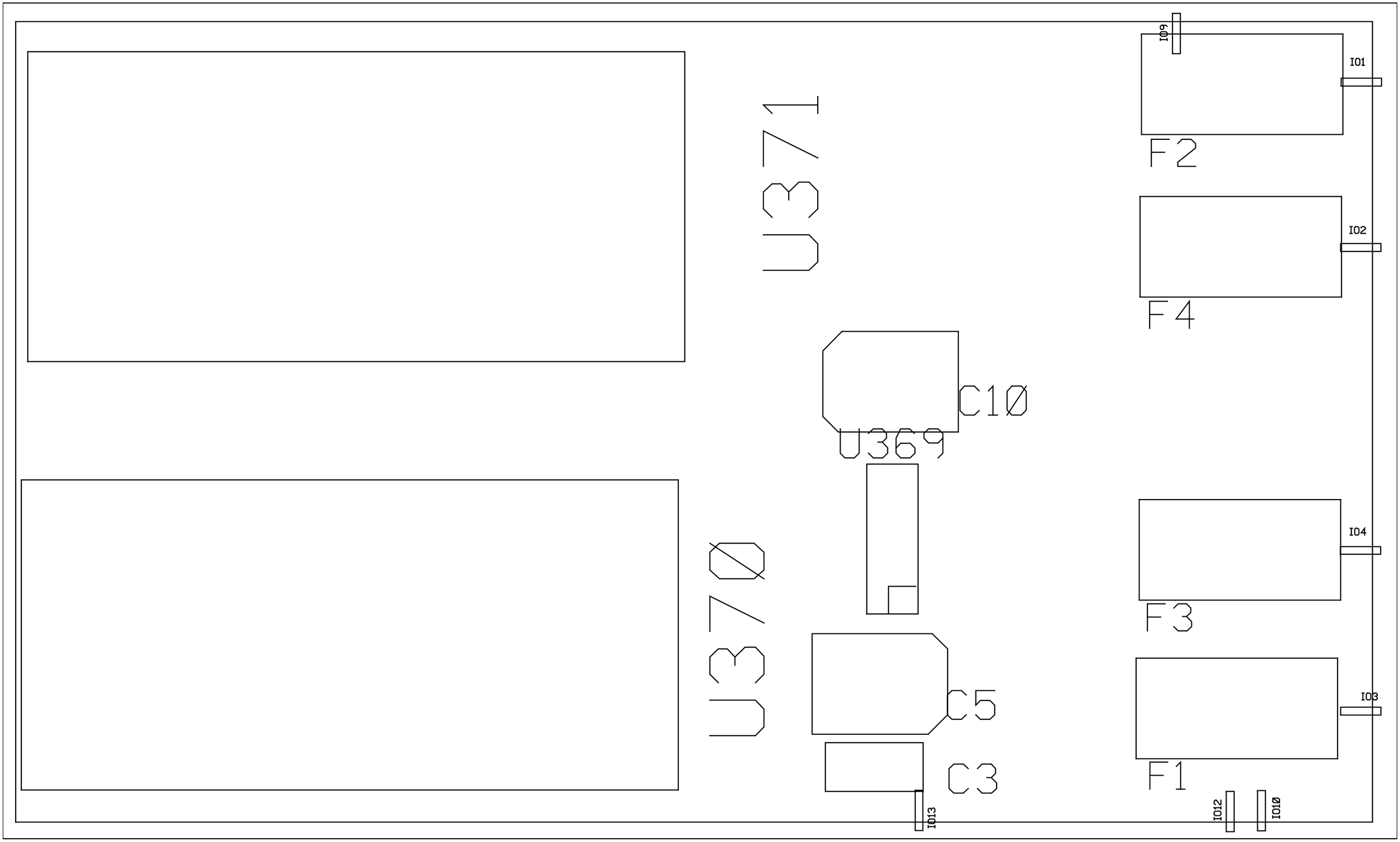
I09
I01
F2
U371
I02
F4
C10
U369
I04
F3
U370
C5
I03
C3
F1
I013
I012
I010

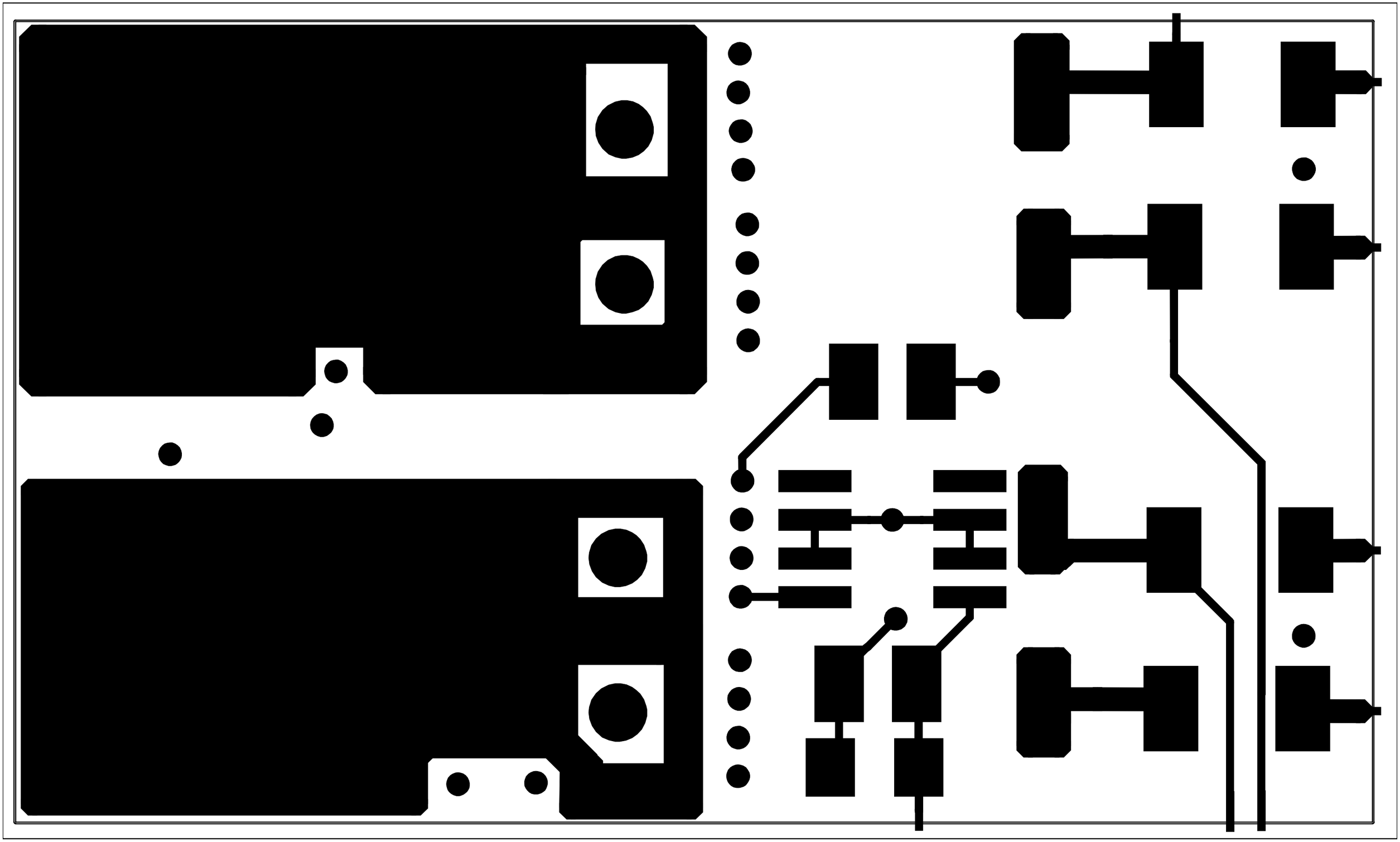

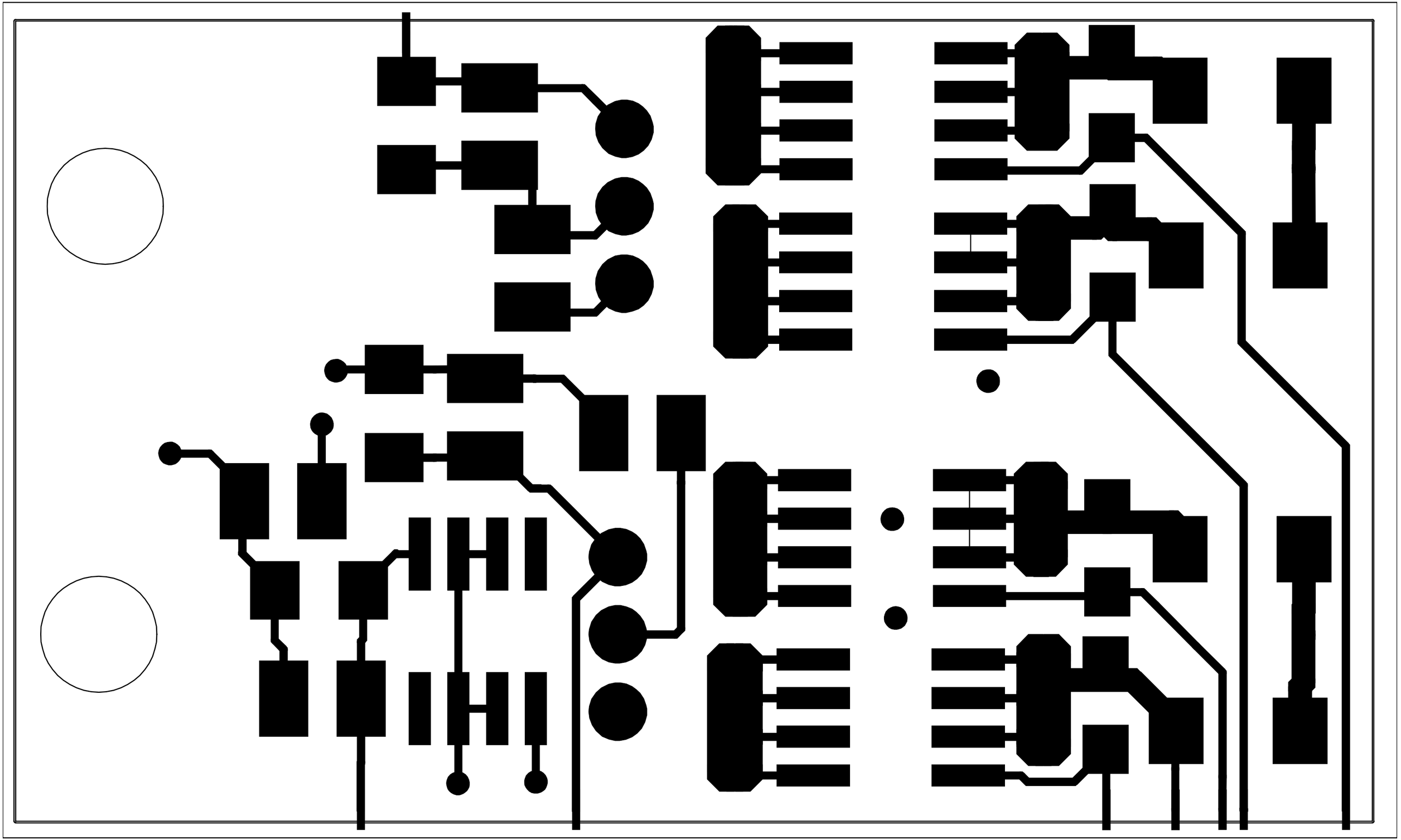

IO14
C5
C15
Q1
K3
D5
C1
Q3
K4
D4
C4
C8
C9
C6
Q5
K1
D3
U3638
C7
Q4
K5
D1
C11
IO16
IO12
IO6
IO11
IO9
IO8
IO7