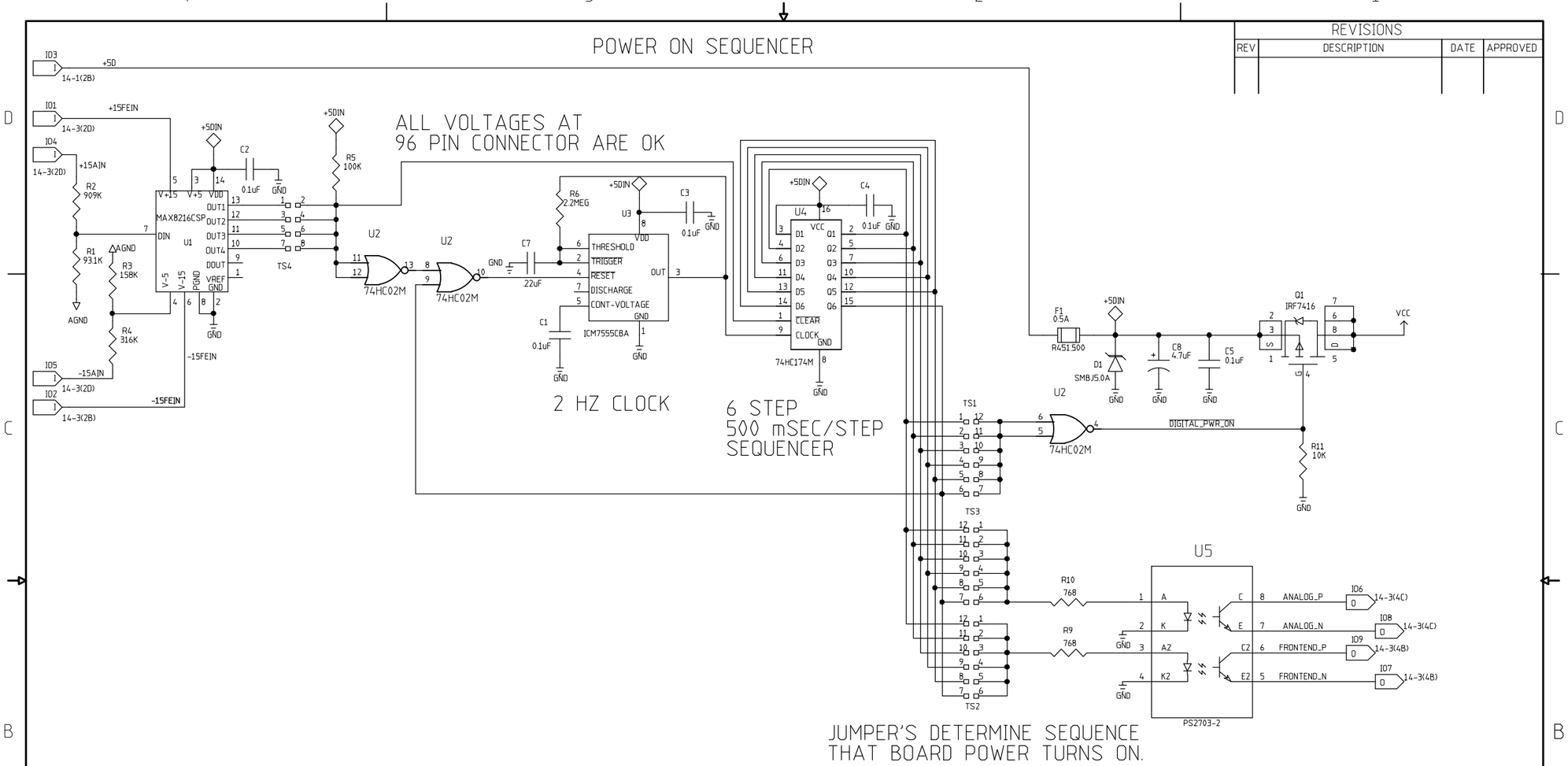

REVISIONS			
REV	DESCRIPTION	DATE	APPROVED

	NAME	DATE
ORIGINATOR	MERLE HALDEMAN	11/18/98
DRAWN	BRUCE MERKEL	11/18/98
CHECKED	TOM CRENNA	1/8/99
APPROVED		

FERMILAB PPD/ETT/ES CDMS (E-891)
ZIP MODULE
5 VOLT SECTION

SIZE	FSCM NO.	DWG. NO.	REV
C			
SCALE		SHEET 14-2	

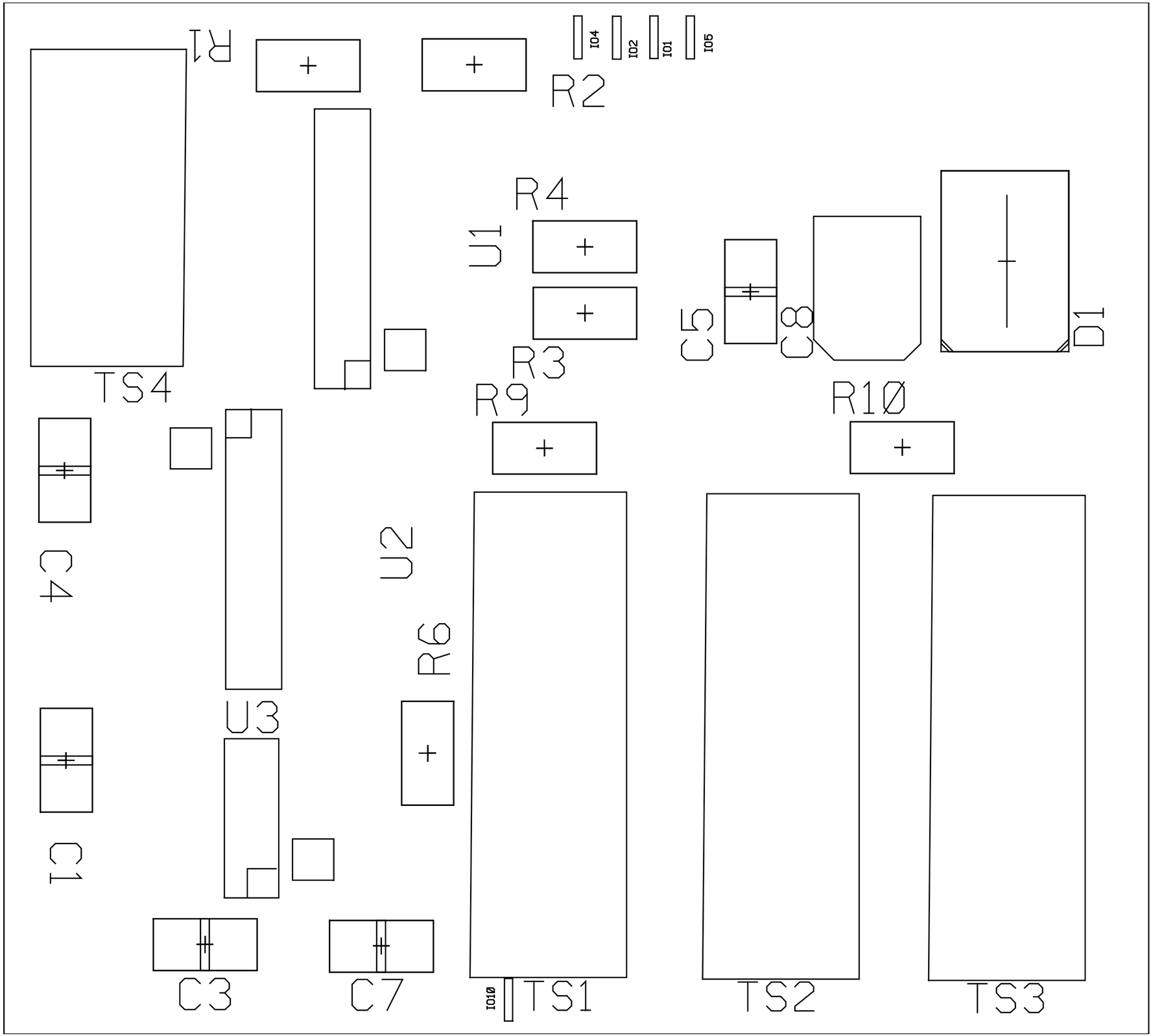
R1
R2
I04
I02
I01
I05
R4
U1
C5
C8
D1
R3
TS4
R9
R10
C4
U2
R6
U3
C1
C3
C7
I010
TS1
TS2
TS3

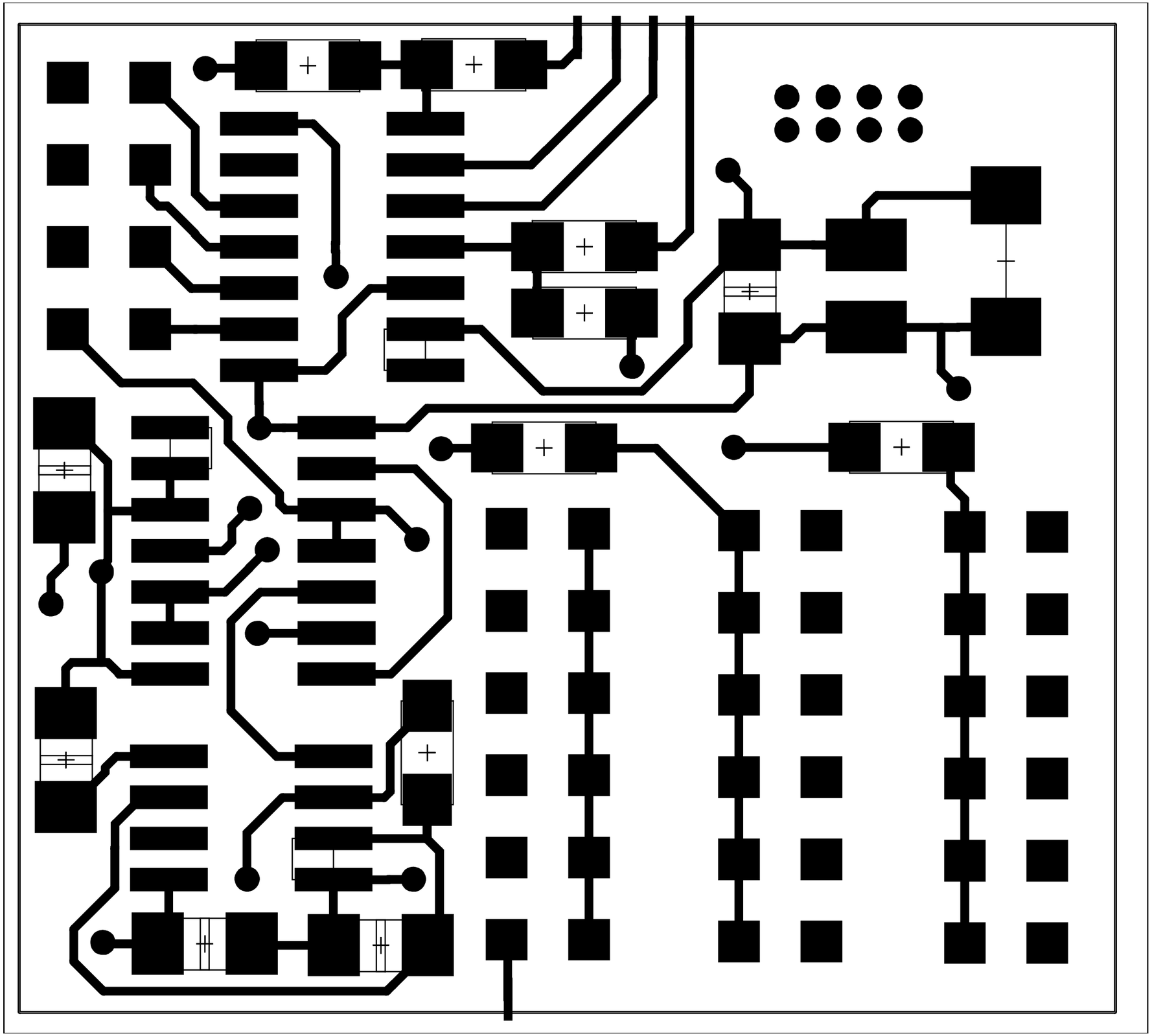

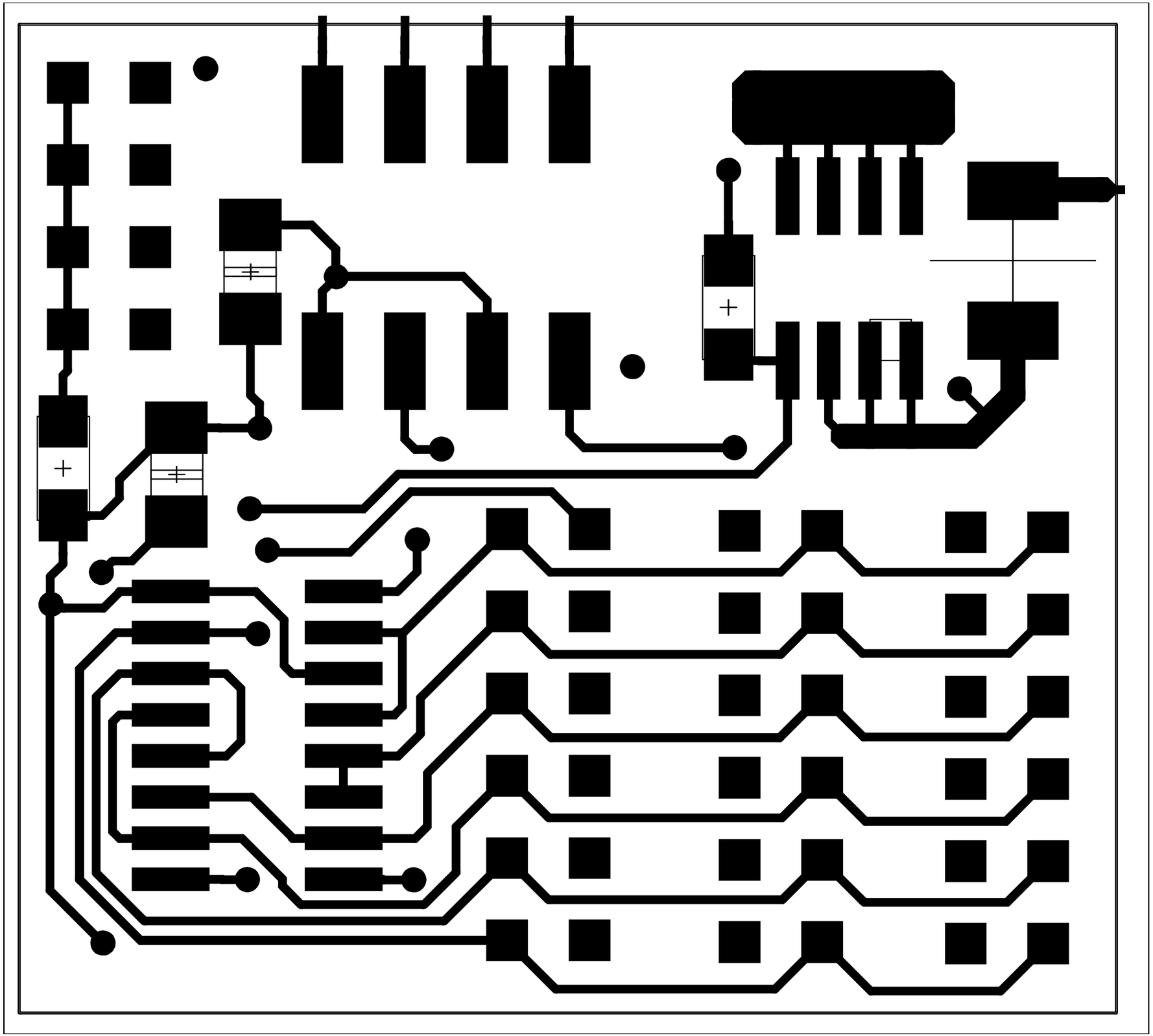

J4
C2
K2
C3
U2
K1
Q1
F1
J3
J6
J8
J4
J7