REVISIONS			
REV	DESCRIPTION	DATE	APPROVED

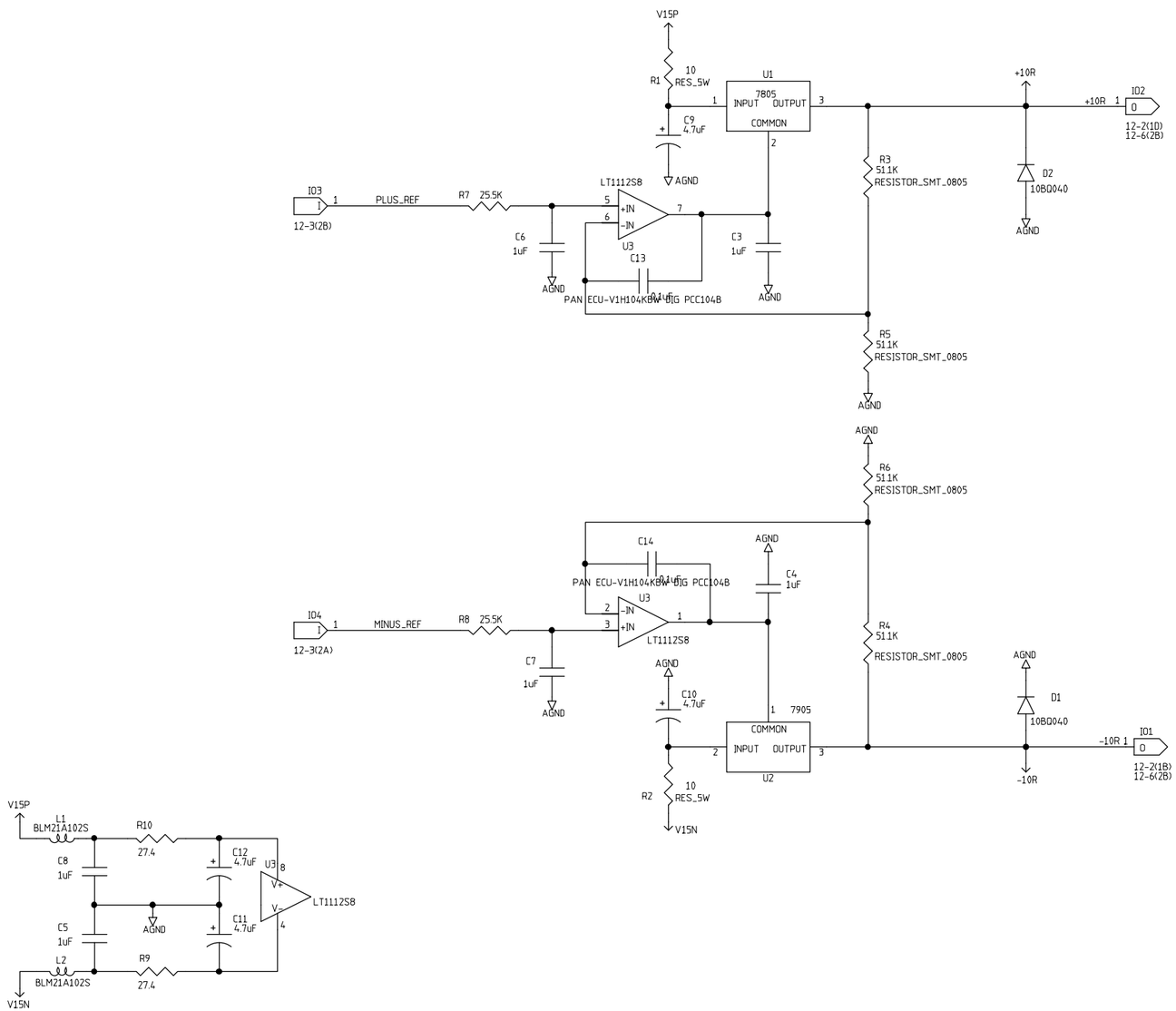

	NAME	DATE
ORIGINATOR	MERLE HALDEMAN	12/01/98
DRAWN	BRUCE MERKEL	12/01/98
CHECKED	TOM CRENNA	1/8/99
APPROVED		

FERMILAB PPD/ ETT/ ES CDMS(E-891)
ZIP MODULE
DAC +/- 10 VOLT REFERENCES

SIZE	FSCM NO.	DWG. NO.	REV
C			
SCALE		SHEET 12-4	

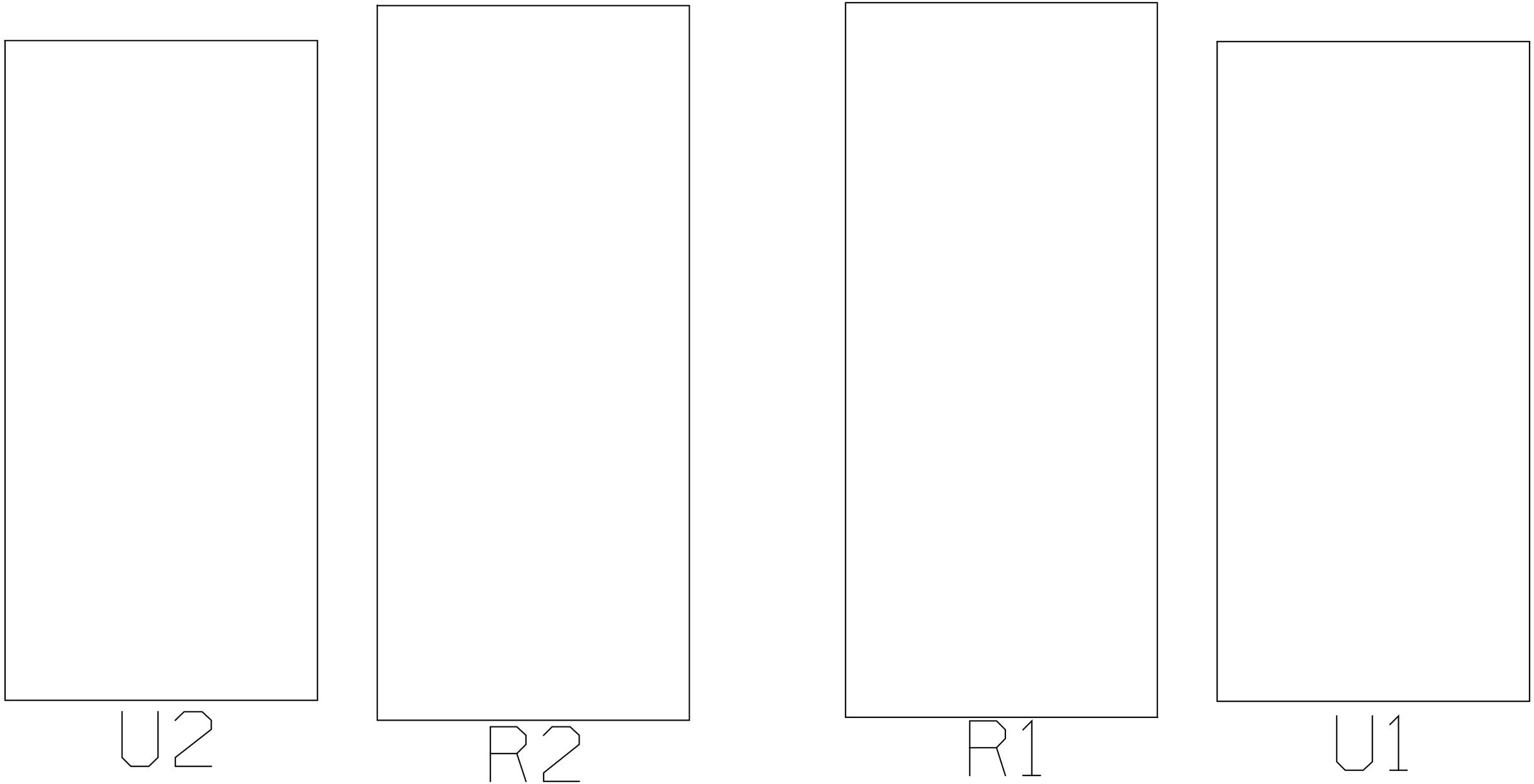
U2
R2
R1
U1

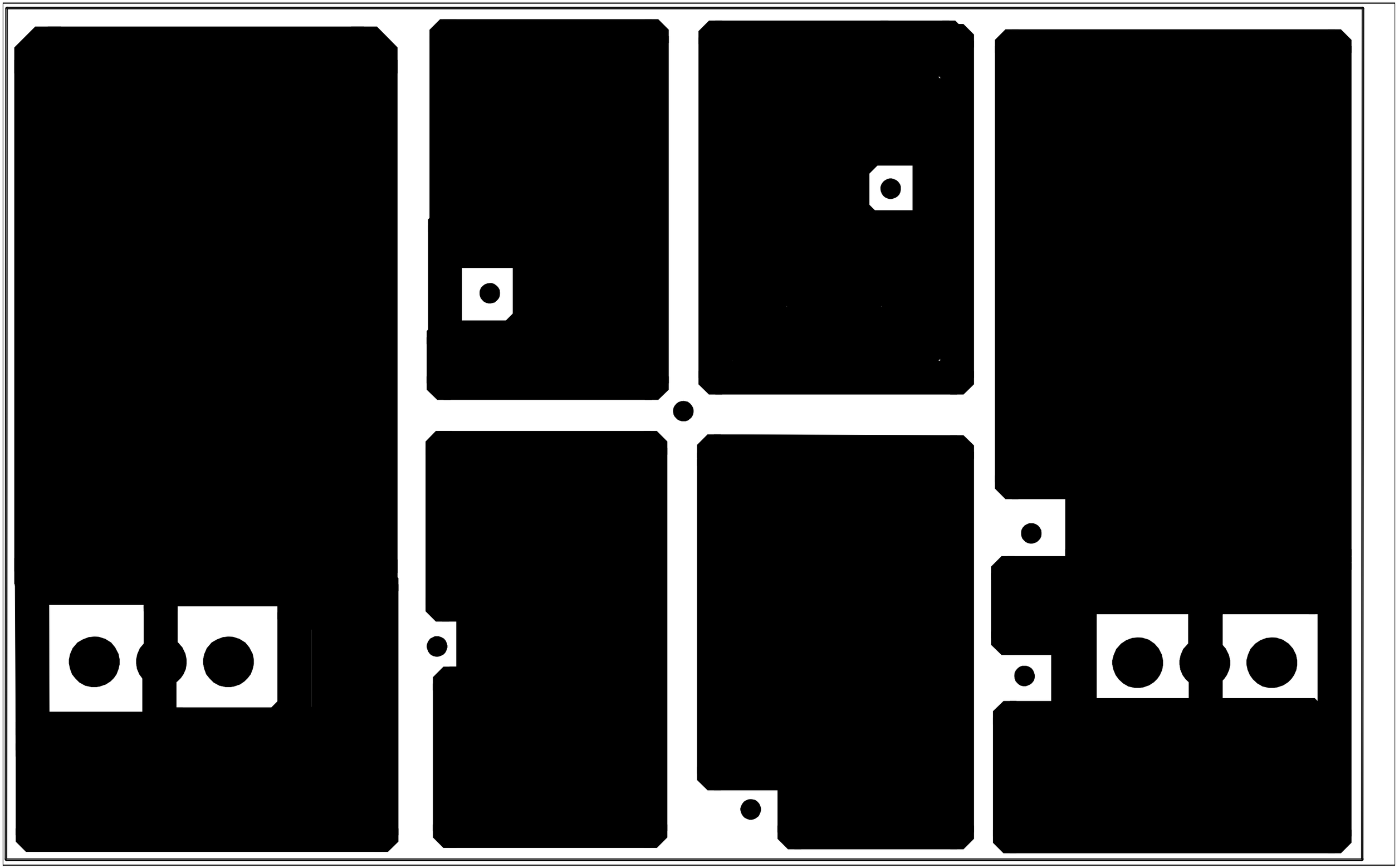

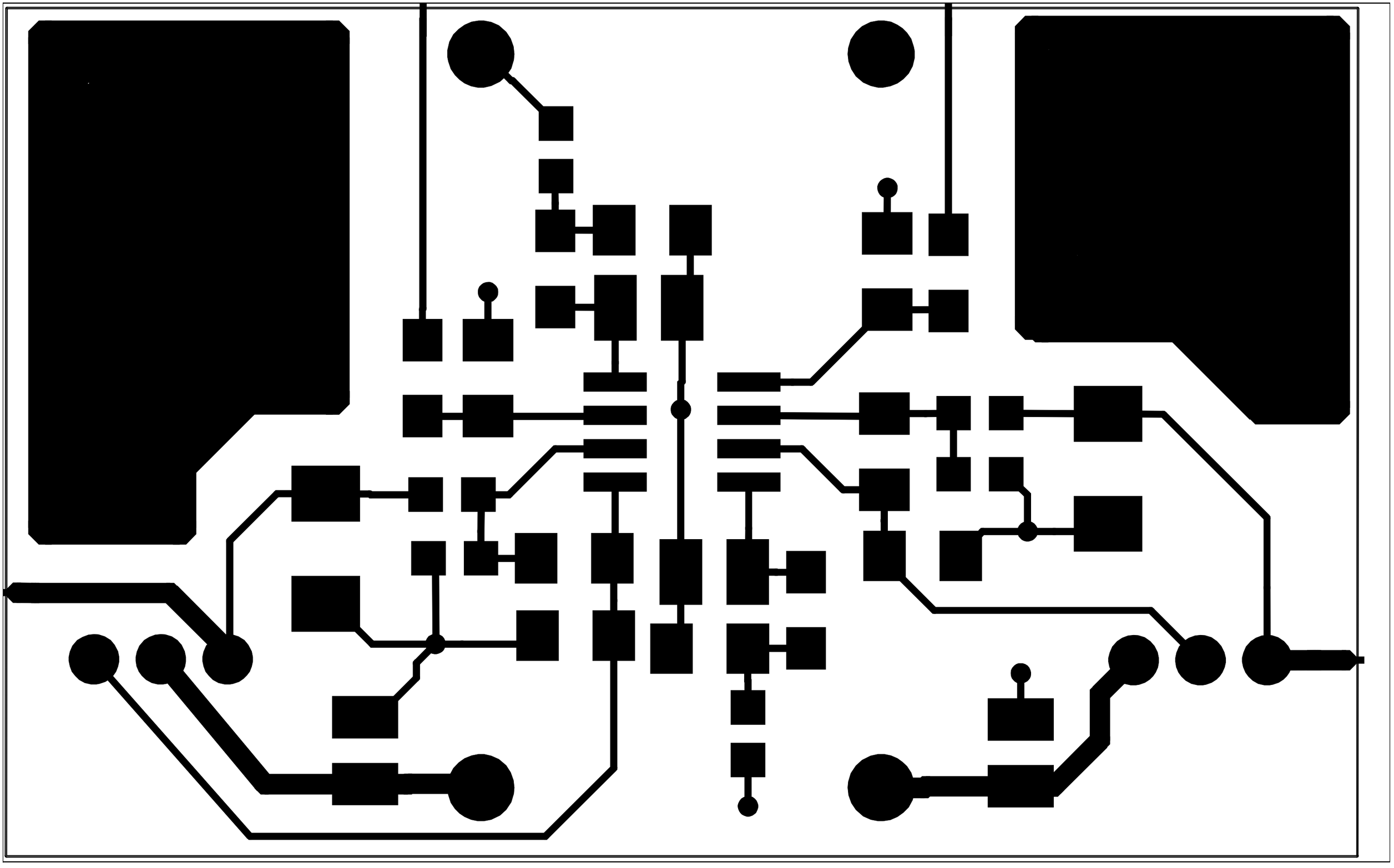

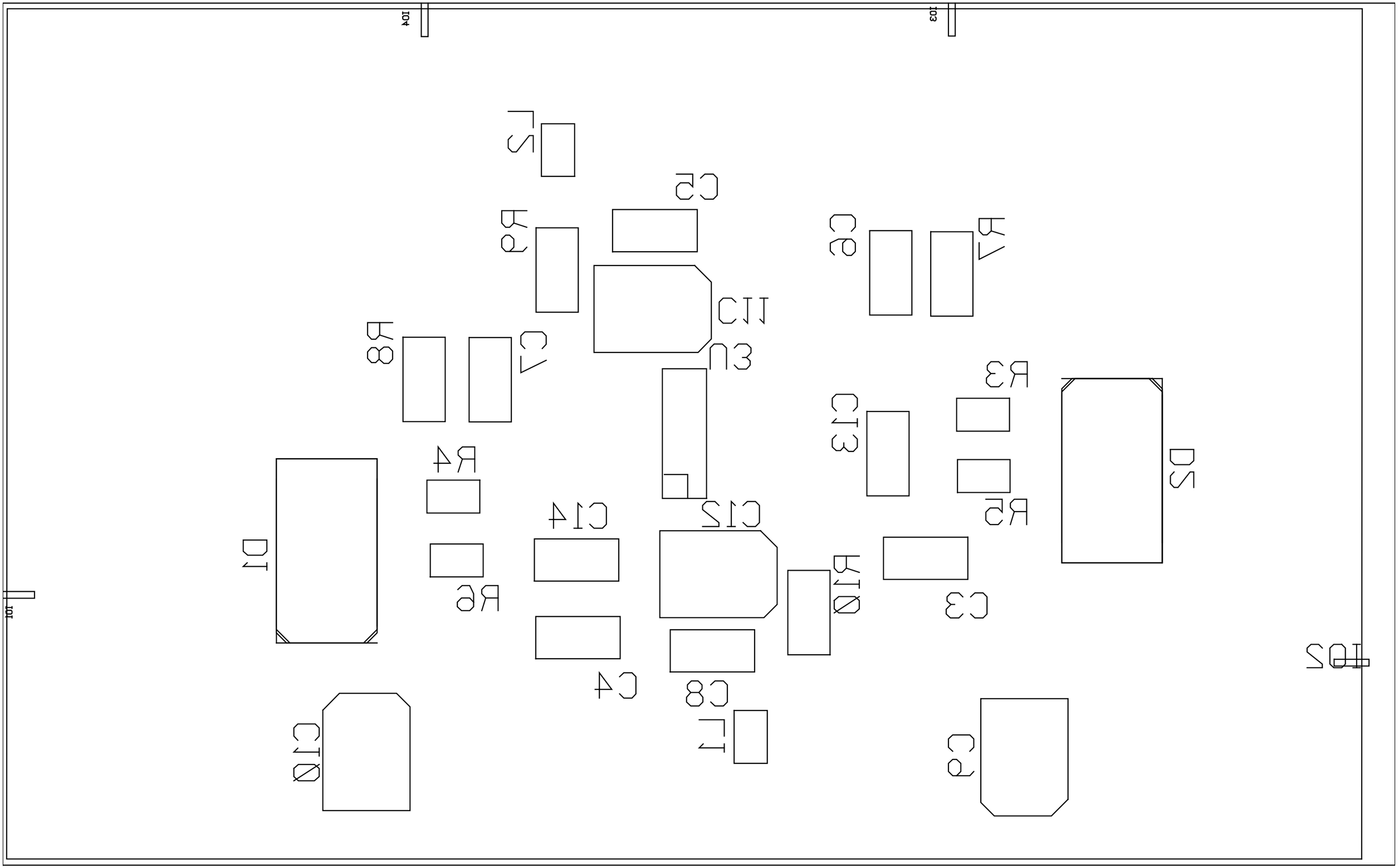
L5
C5
R9
C9
R7
U3
C11
R8
C7
R3
C13
D2
R4
R5
C14
C12
D1
R6
R10
C3
U2
C4
C8
L1
C10
C2