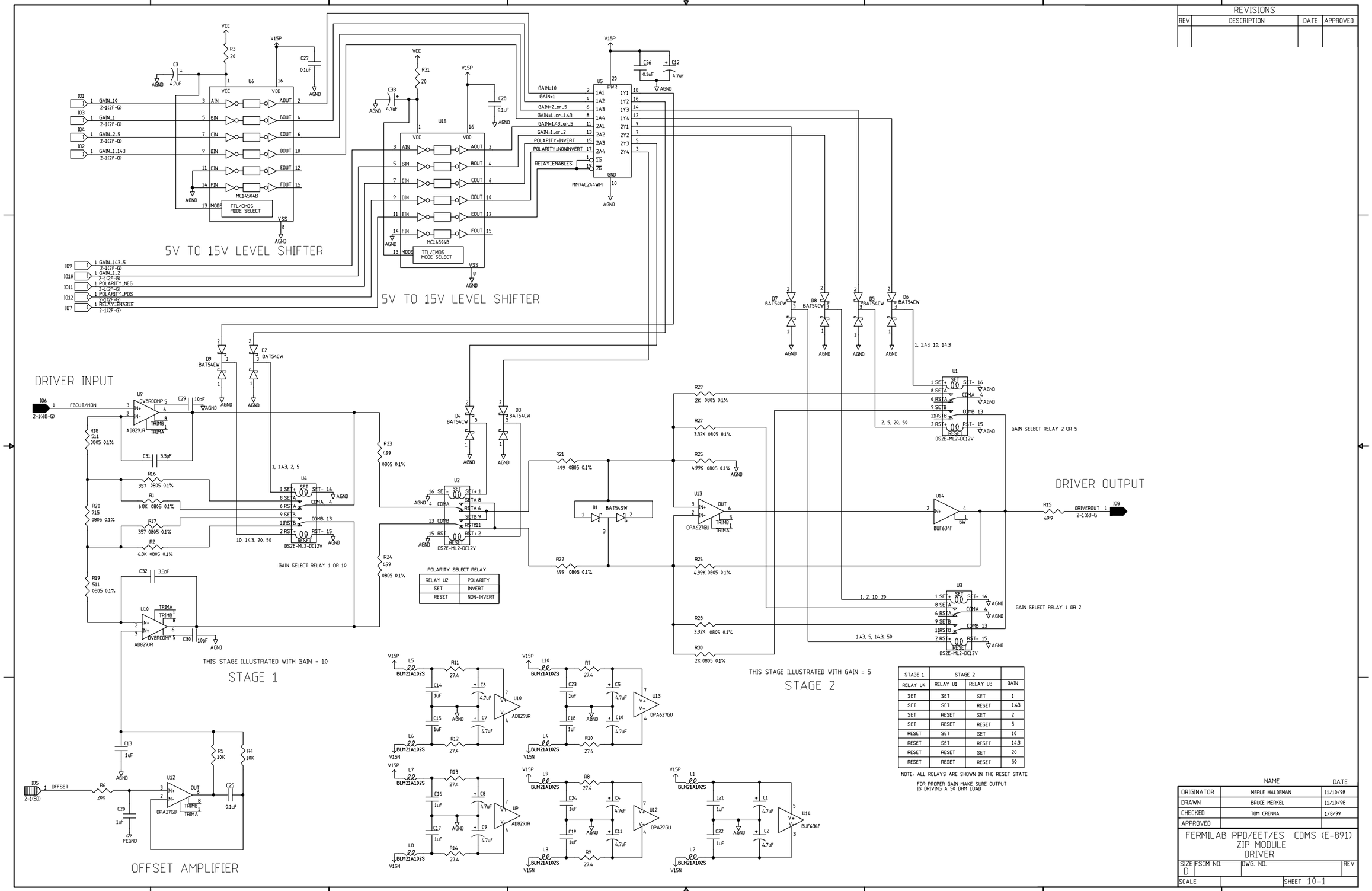
5V TO 15V LEVEL SHIFTER
5V TO 15V LEVEL SHIFTER
DRIVER INPUT
DRIVER OUTPUT
STAGE 1
THIS STAGE ILLUSTRATED WITH GAIN = 10
STAGE 2
THIS STAGE ILLUSTRATED WITH GAIN = 5
OFFSET AMPLIFIER
GAIN SELECT RELAY 2 OR 5
GAIN SELECT RELAY 1 OR 10
GAIN SELECT RELAY 1 OR 2
POLARITY SELECT RELAY
RELAY U2 | POLARITY
SET | INVERT
RESET | NON-INVERT
STAGE 1 | STAGE 2 | |
RELAY U4 | RELAY U1 | RELAY U3 | GAIN
SET | SET | SET | 1
SET | SET | RESET | 1.43
SET | RESET | SET | 2
SET | RESET | RESET | 5
RESET | SET | SET | 10
RESET | SET | RESET | 14.3
RESET | RESET | SET | 20
RESET | RESET | RESET | 50
NOTE: ALL RELAYS ARE SHOWN IN THE RESET STATE
FOR PROPER GAIN MAKE SURE OUTPUT IS DRIVING A 50 OHM LOAD
REVISIONS
REV | DESCRIPTION | DATE | APPROVED
NAME | DATE
ORIGINATOR | MERLE HALDEMAN | 11/10/98
DRAWN | BRUCE MERKEL | 11/10/98
CHECKED | TOM CRENNA | 1/8/99
APPROVED
FERMILAB PPD/EET/ES CDMS (E-891)
ZIP MODULE
DRIVER
SIZE D | FSCM NO. | DWG. NO. | REV
SCALE | SHEET 10-1

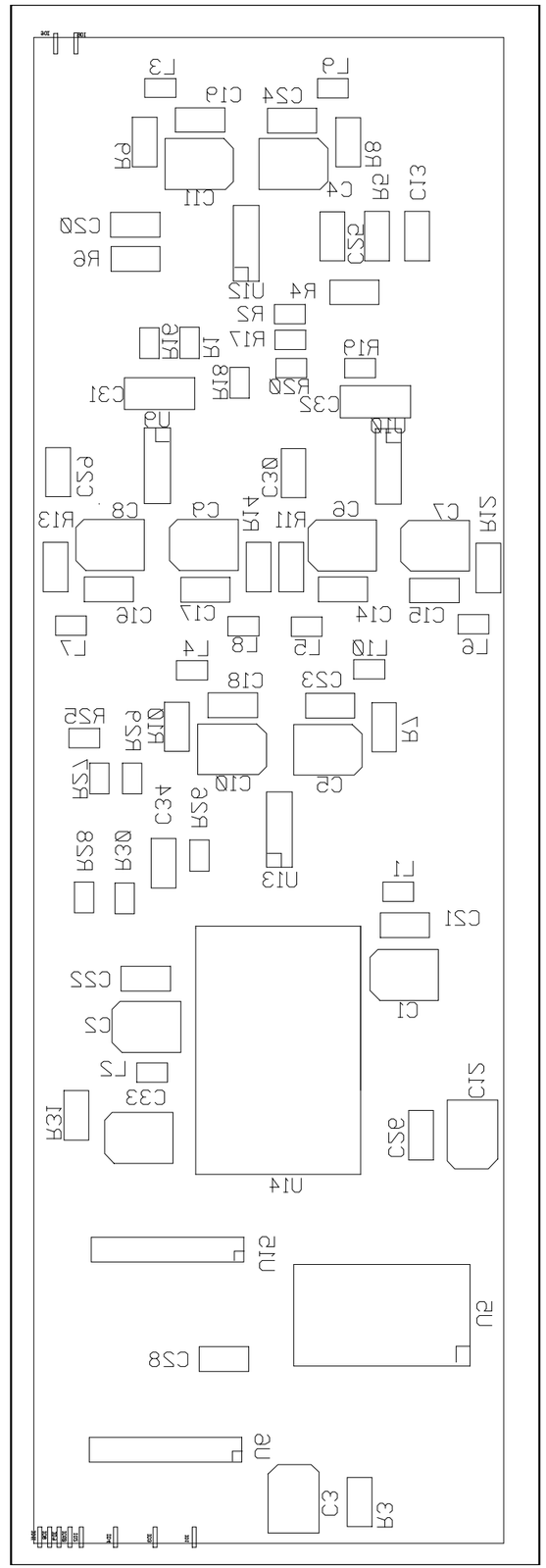
J3
C19
C24
J9
R9
R8
C11
C4
R29
C13
C20
R6
C22
U12
R4
R2
R17
R19
R18
R1
R16
C31
D2
R20
C32
D10
C29
C30
R13
C8
C9
R14
R11
C6
C7
R12
C16
C17
C14
C15
J7
J4
J8
J5
J10
J6
R25
R24
R10
C18
C23
R7
R27
C10
C5
C34
R26
R28
R30
C3
U13
J1
C21
C22
C2
C1
J2
C33
R31
C25
C12
U14
U5
U6
C28
U9
C3
R3

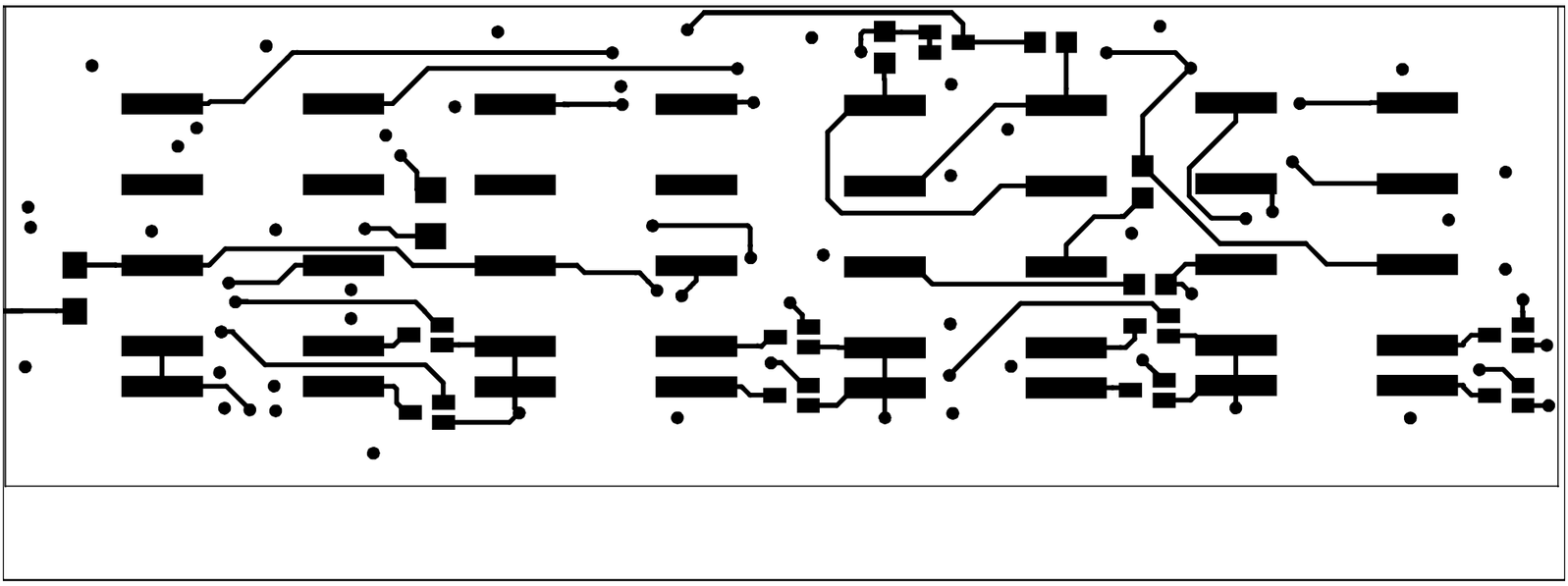

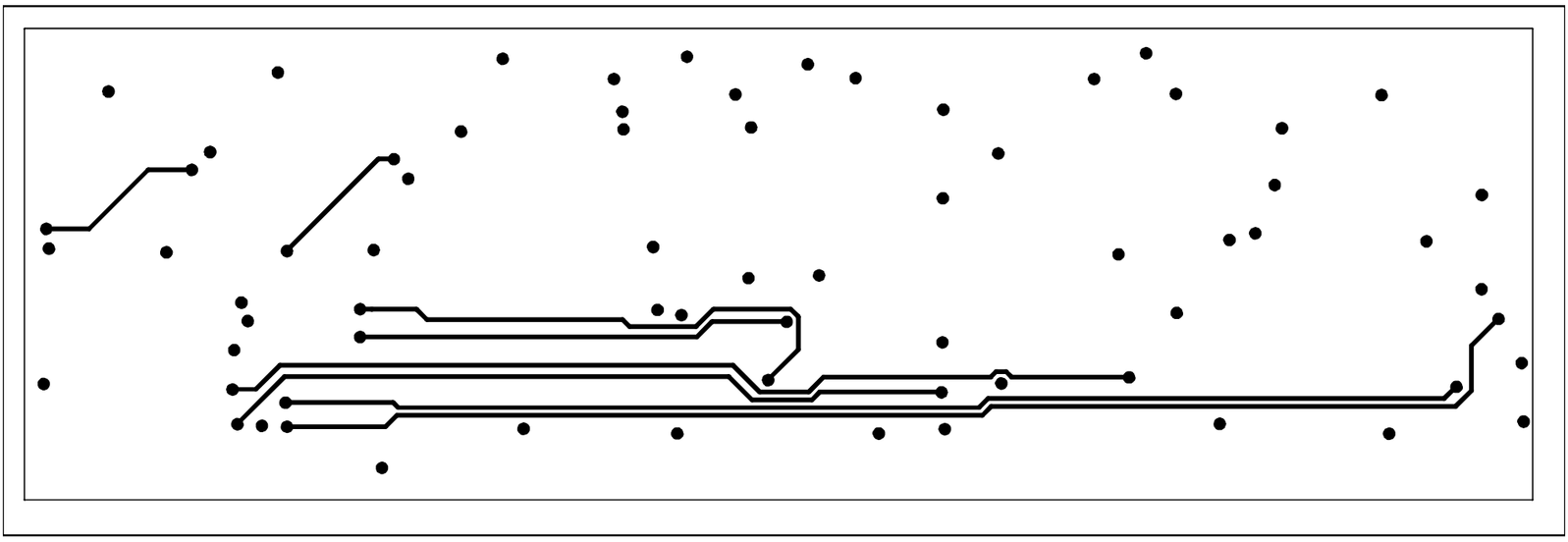

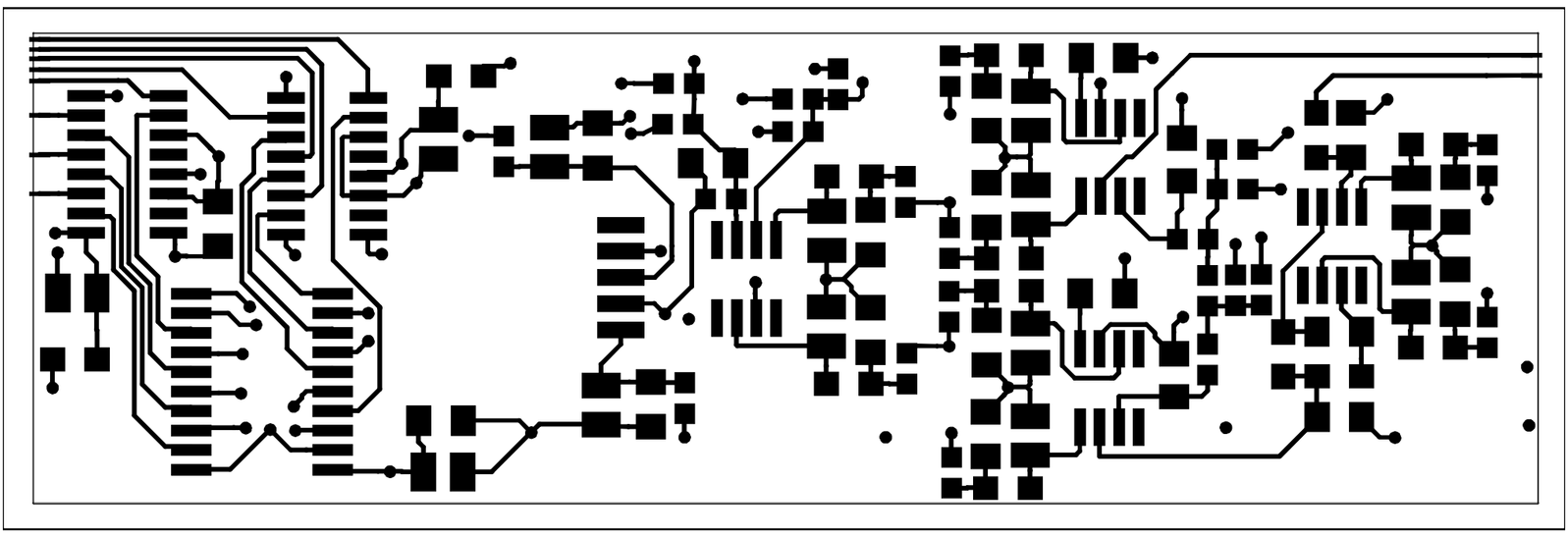

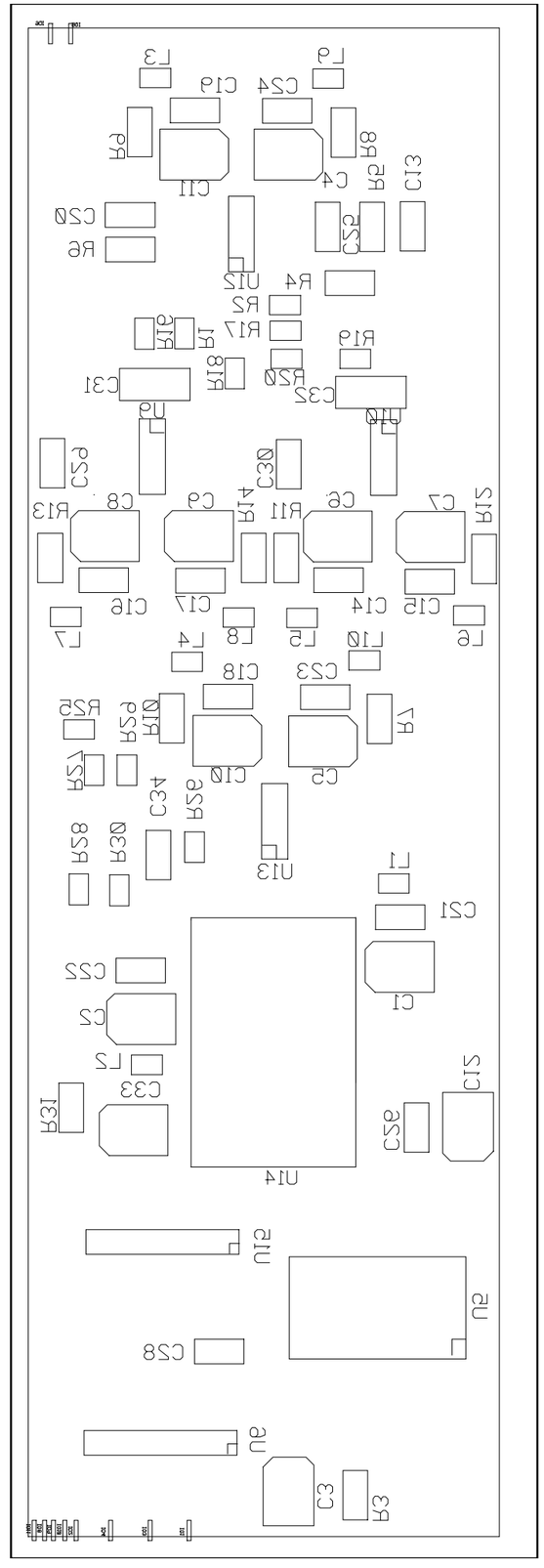
L3
C19
C24
L9
R9
R8
C11
C4
R5
C13
C20
R6
C22
U12
R4
R2
R17
R16
R1
R19
R18
R20
C31
C32
U9
U10
C29
C30
R14
C8
C9
R11
C6
C7
R12
R13
C16
C17
C14
C15
L7
L4
L8
L5
L10
L6
C18
C23
R25
R24
R10
R7
R23
C10
C5
R28
R30
C34
R29
U13
L1
C21
C22
C2
C1
L2
C33
R31
C28
C12
U14
C10
U2
C28
U3
C3
R3