# FET_HEATER

| REVISIONS | | | |
|---|---|---|---|
| REV | DESCRIPTION | DATE | APPROVED |
| 1 | SCHEMATIC UPDATED FOR VERSION 1 | 10/18/99 | BDM |

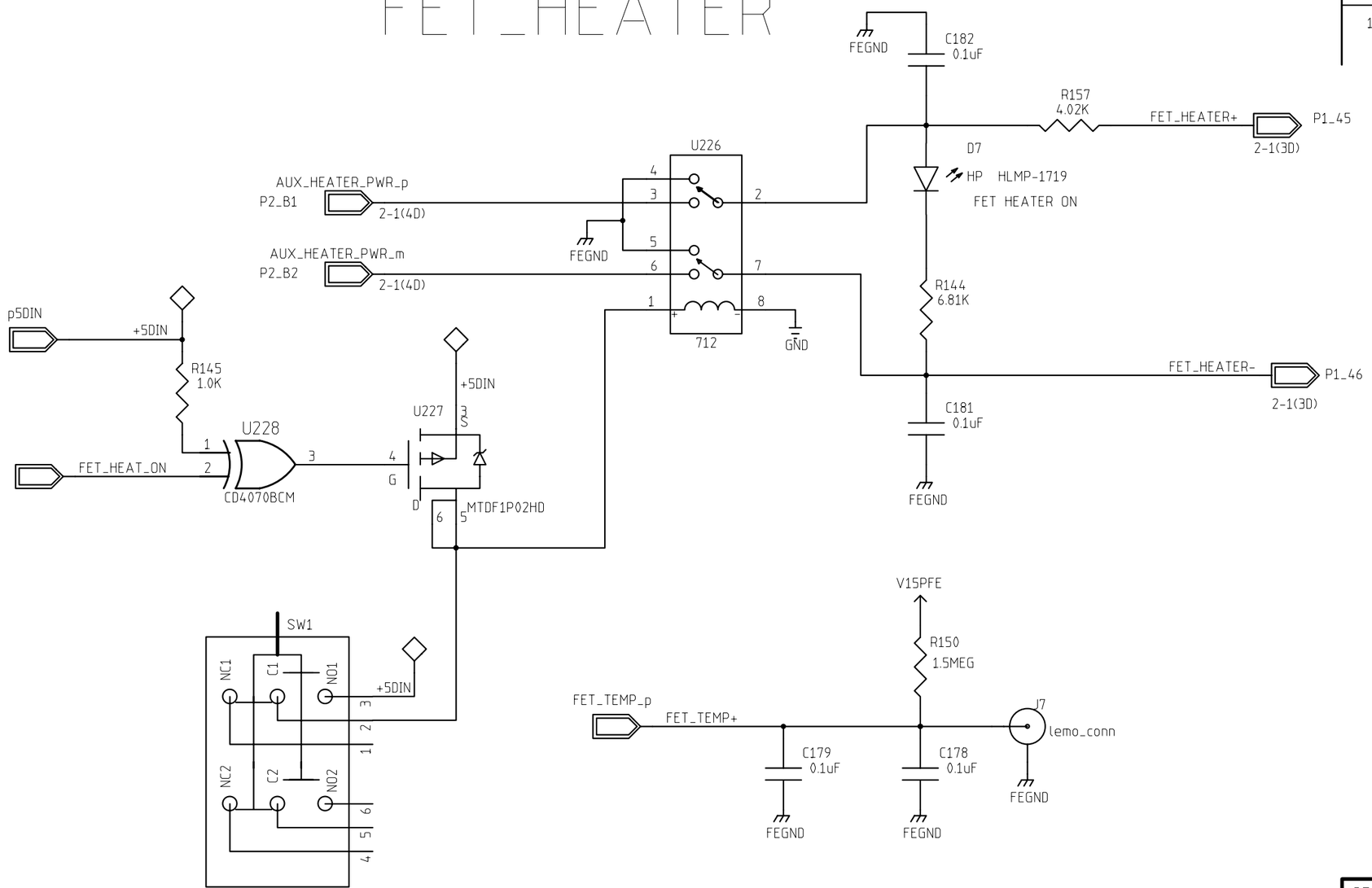


1: ALL RESISTORS ARE 1% UNLESS OTHERWISE STATED
2: ALL LOGIC LEVELS ARE HIGH TRUE

| | NAME | DATE |
|---|---|---|
| ORIGINATOR | MERLE HALDEMAN | 9/23/99 |
| DRAWN | BRUCE MERKEL | 9/23/99 |
| CHECKED | | |
| APPROVED | | |

FERMILAB PPD/EET/ES CDMS (E-891)
ZIP MODULE
FET_HEATER

| SIZE | FSCM NO. | DWG. NO. | REV |
|---|---|---|---|
| B | | | 1 |
| SCALE | | SHEET 9-1 | |