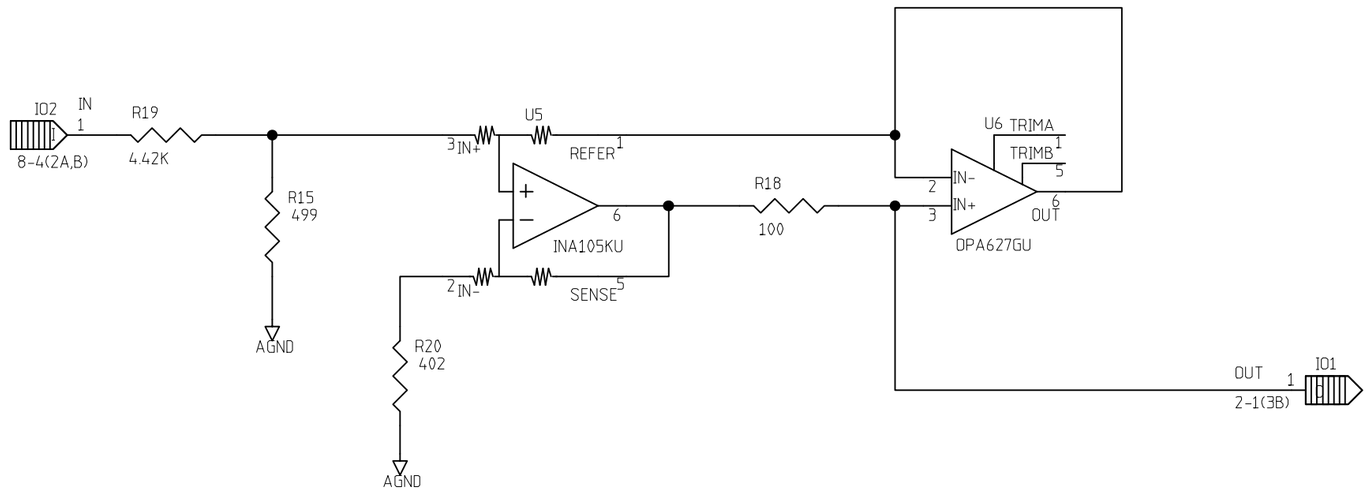

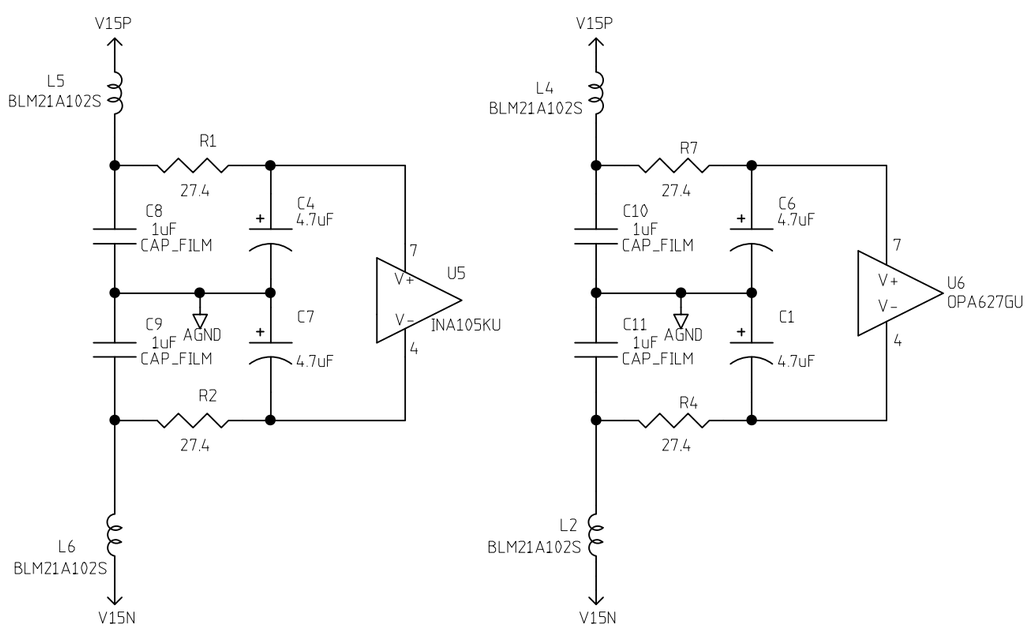

REVISIONS

REV	DESCRIPTION	DATE	APPROVED
1	CHANGED RESISTOR R18 TO 499 OHM	9/25/00	BDM
2	CHANGED RESISTOR R18 TO 100 OHM ADDED RESISTOR R19	4/4/01	BDM
3	CHANGED RESISTORS R15 AND R19 AND ADDED RESISTOR R20	6/19/01	BDM

	NAME	DATE
ORIGINATOR	MERLE HALDEMAN	11/16/98
DRAWN	BRUCE MERKEL	12/09/98
CHECKED	TOM CRENNA	1/6/99
APPROVED		

FERMILAB PPD/ ETT/ ES CDMS(E-891)
ZIP MODULE
LED CURRENT SOURCE

SIZE	FSCM NO.	DWG. NO.	REV
B			3

SCALE | SHEET 8-5