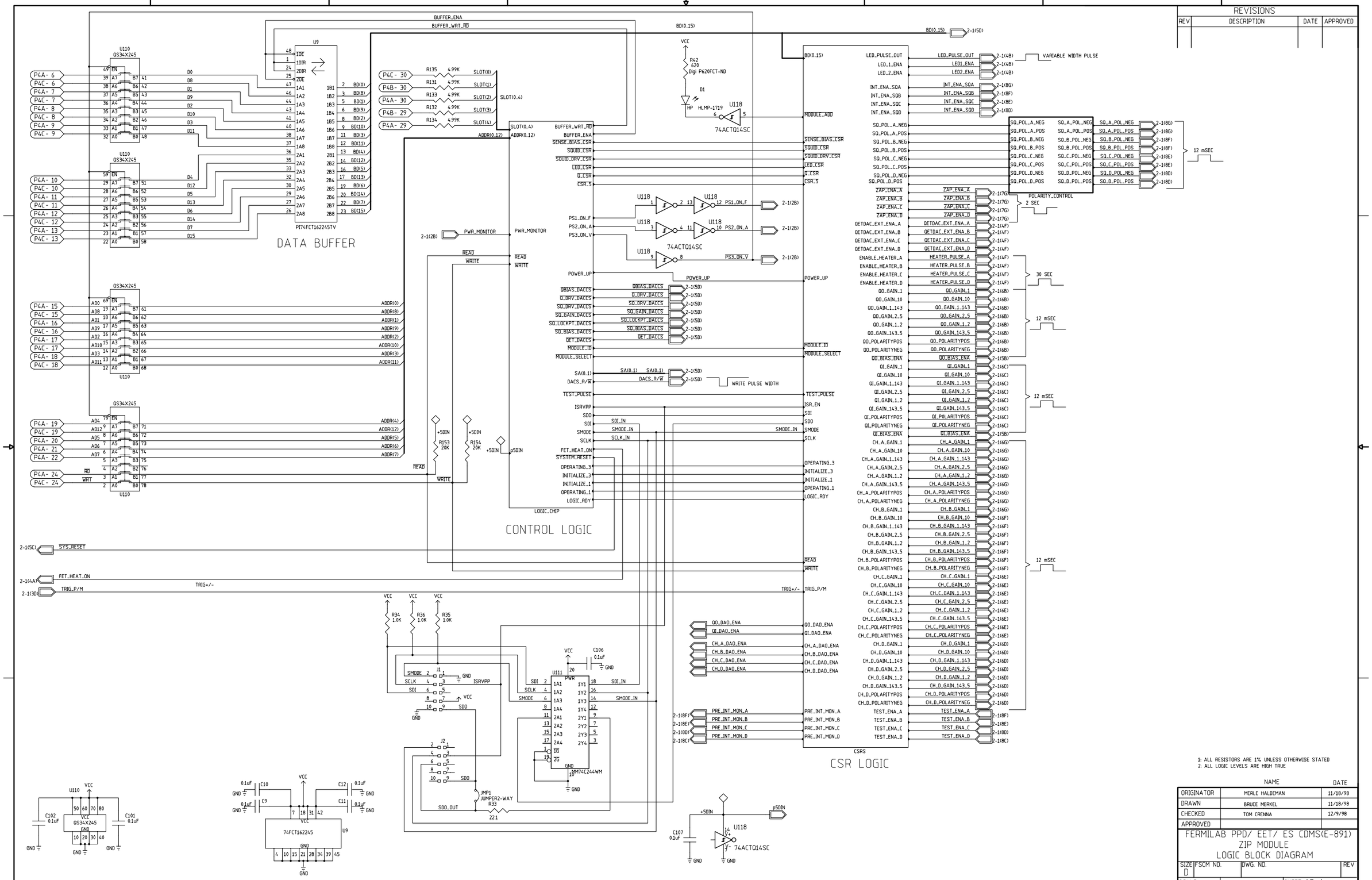

REVISIONS			
REV	DESCRIPTION	DATE	APPROVED

1: ALL RESISTORS ARE 1% UNLESS OTHERWISE STATED
2: ALL LOGIC LEVELS ARE HIGH TRUE

	NAME	DATE
ORIGINATOR	MERLE HALDEMAN	11/18/98
DRAWN	BRUCE MERKEL	11/18/98
CHECKED	TOM CRENNA	12/9/98
APPROVED		

FERMILAB PPD/ EET/ ES CDMS(E-891)
ZIP MODULE
LOGIC BLOCK DIAGRAM

SIZE	FSCM NO.	DWG. NO.	REV
D			
SCALE		SHEET 13-1	