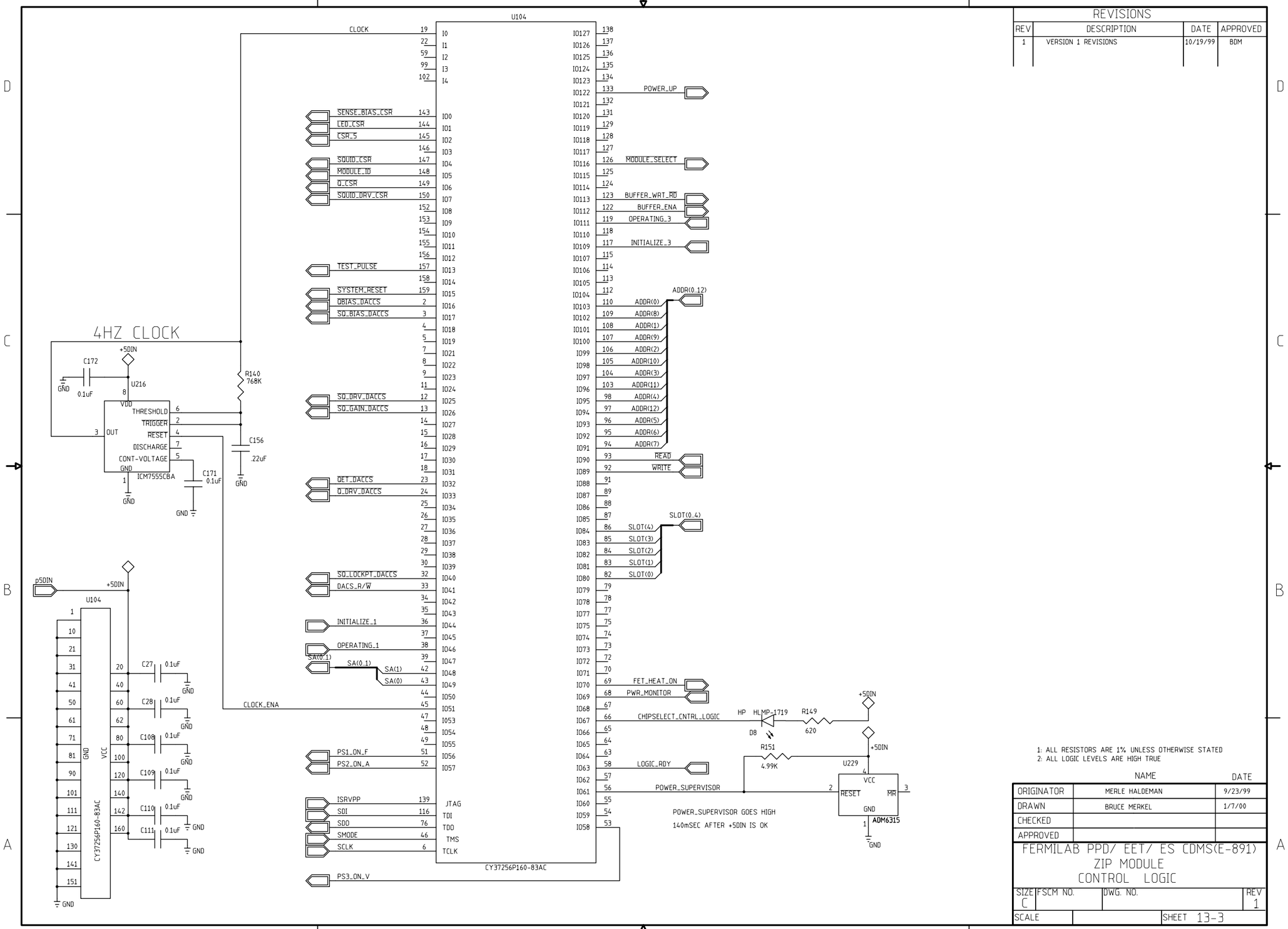

REVISIONS			
REV	DESCRIPTION	DATE	APPROVED
1	VERSION 1 REVISIONS	10/19/99	BDM

1: ALL RESISTORS ARE 1% UNLESS OTHERWISE STATED
2: ALL LOGIC LEVELS ARE HIGH TRUE

	NAME	DATE
ORIGINATOR	MERLE HALDEMAN	9/23/99
DRAWN	BRUCE MERKEL	1/7/00
CHECKED		
APPROVED		

FERMILAB PPD/ EET/ ES CDMS(E-891)
ZIP MODULE
CONTROL LOGIC

SIZE	FSCM NO.	DWG. NO.	REV
C			1
SCALE		SHEET 13-3	