REVISIONS			
REV	DESCRIPTION	DATE	APPROVED

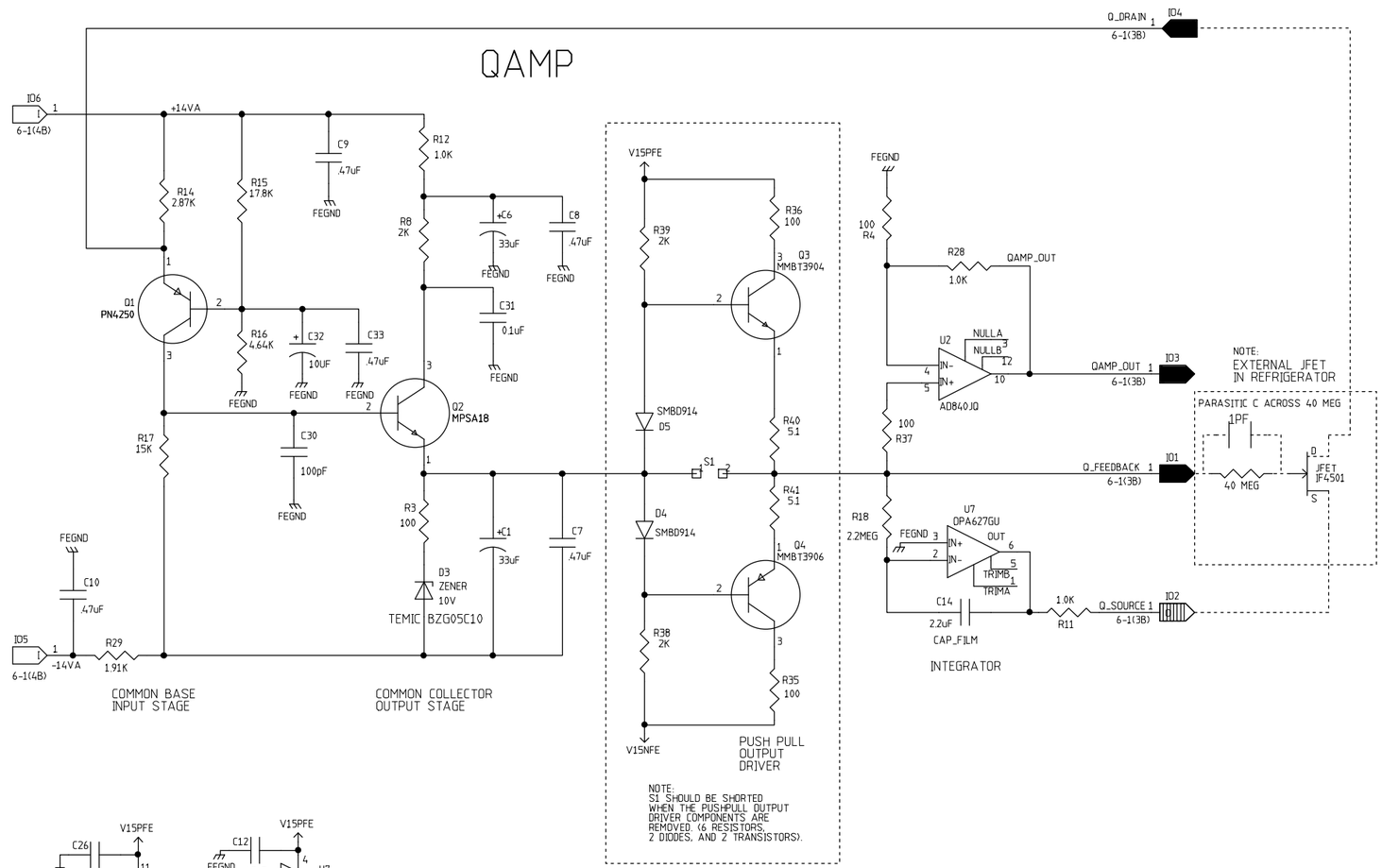

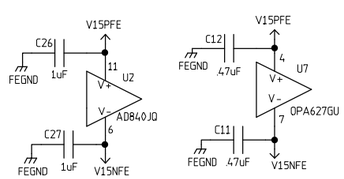

	NAME	DATE
ORIGINATOR	MERLE HALDEMAN	11/16/98
DRAWN	BRUCE MERKEL	11/16/98
CHECKED	TOM CRENNA	1/6/99
APPROVED		

FERMILAB PPD/EET/ES CDMS (E-891)
ZIP MODULE
DISCRETE Q AMPLIFIER

SIZE	FSCM NO.	DWG. NO.	REV
C			
SCALE		SHEET 6-2	

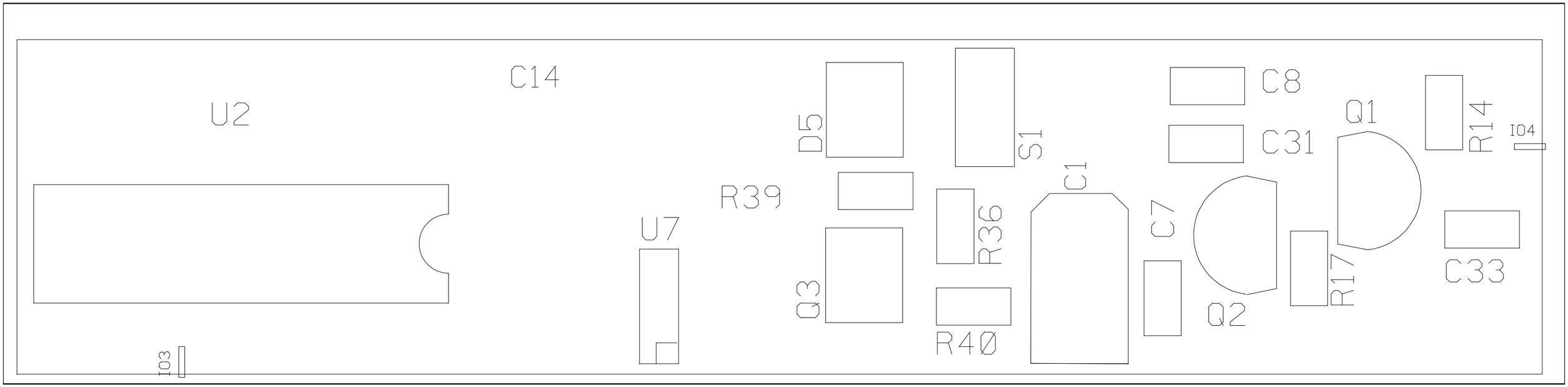
C14
U2
D5
S1
C8
C31
Q1
R14
IO4
R39
C1
U7
R36
C7
Q3
R17
C33
Q2
R40
IO3

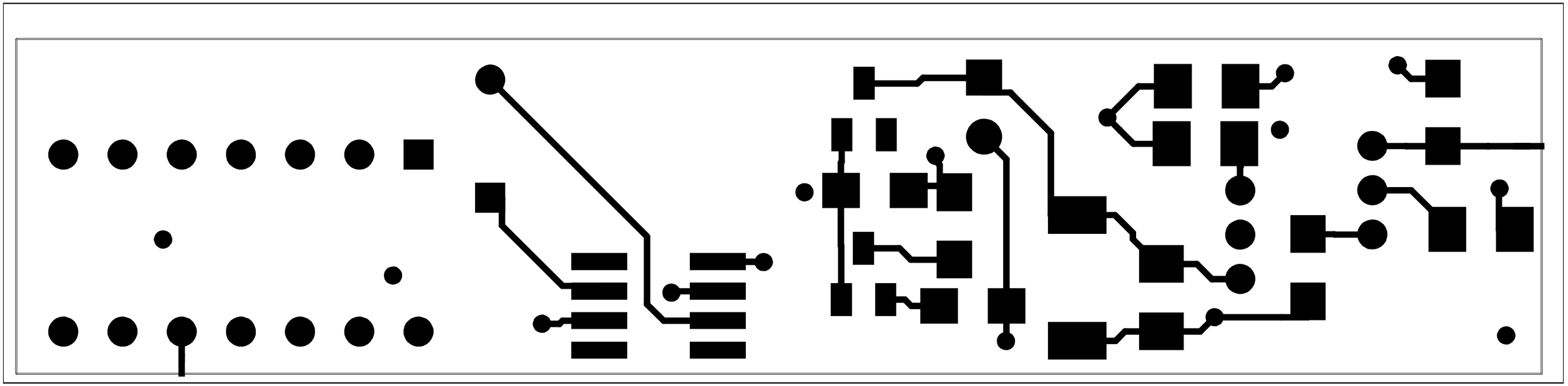

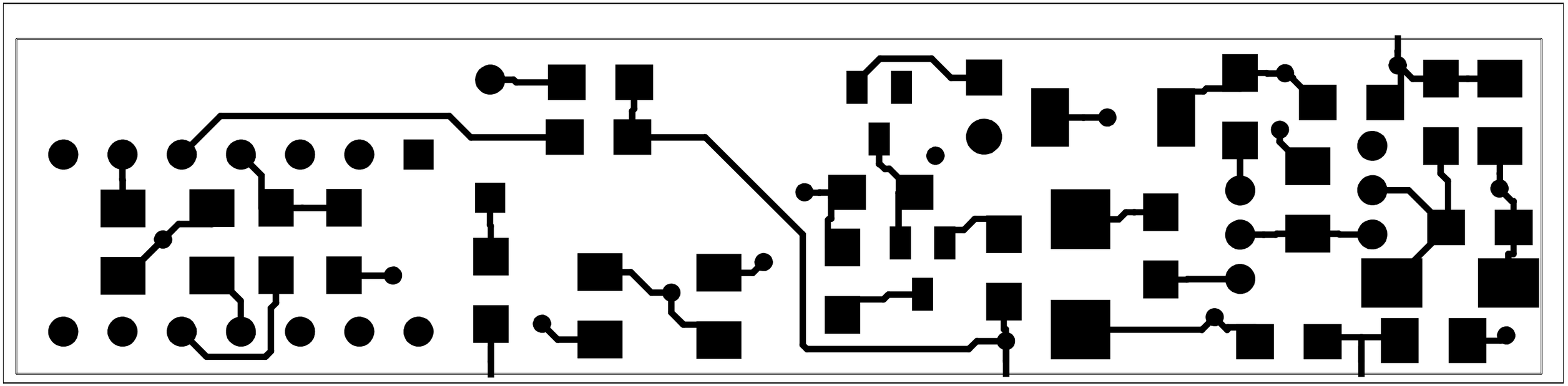

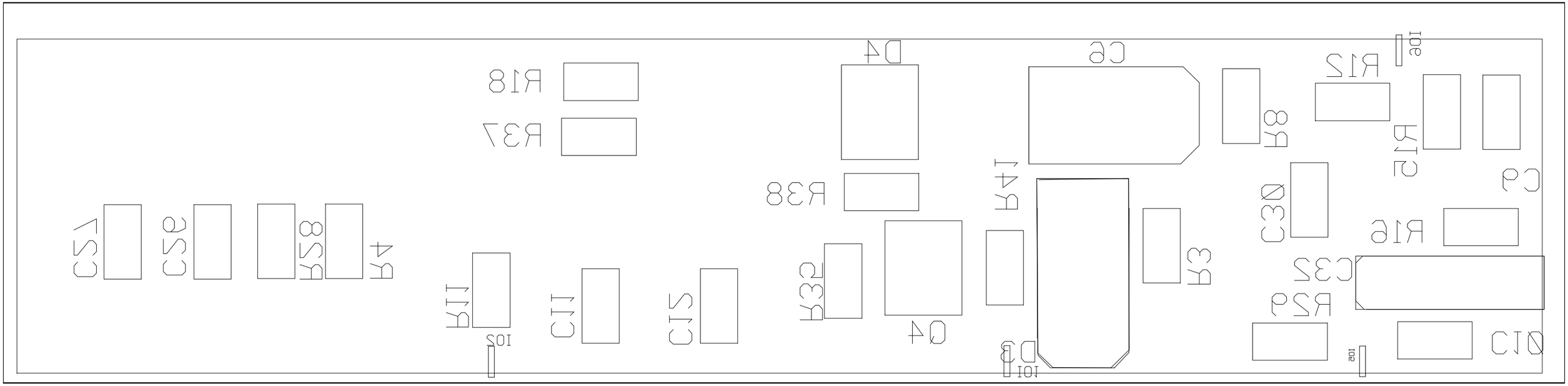
C1
C2
R8
R4
R18
R37
R11
C11
C15
R32
Q4
R38
D4
R41
D3
C6
R3
R8
R12
R13
C9
C30
R16
C32
R29
C10
1pe
1pe
1pe
1pe