REVISIONS			
REV	DESCRIPTION	DATE	APPROVED
0	MOVED DIGITAL OUT OF ANALOG AREA	3/24/99	B MERKEL

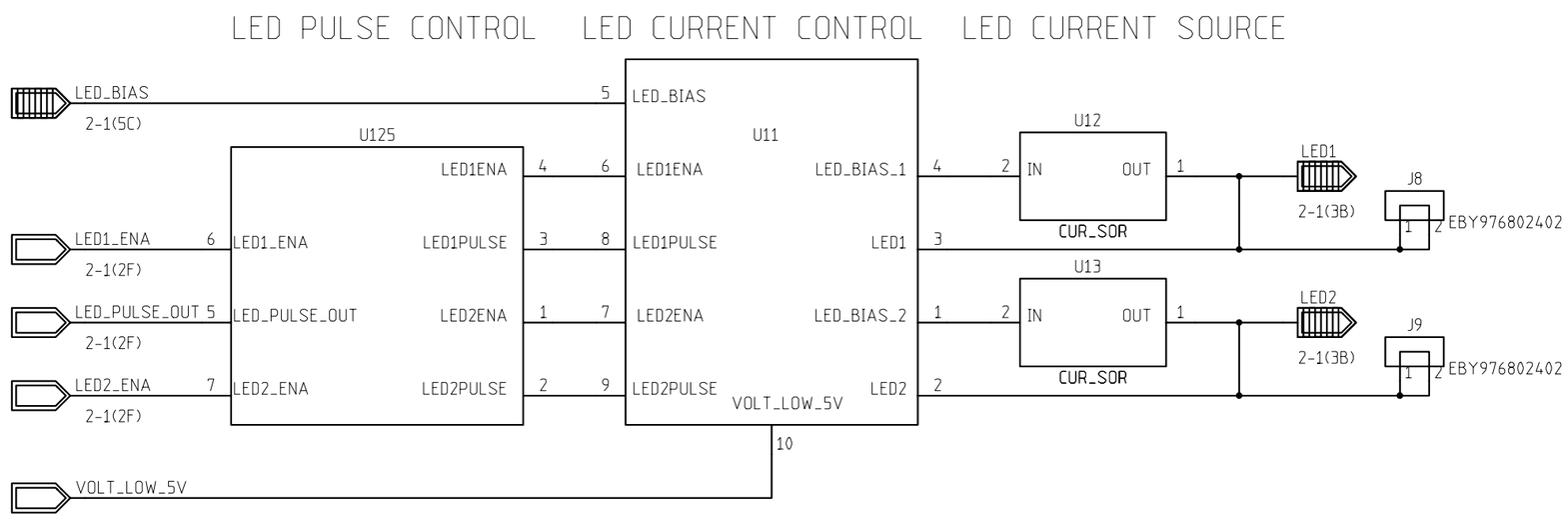

	NAME	DATE
ORIGINATOR	MERLE HALDEMAN	11/16/98
DRAWN	BRUCE MERKEL	3/24/99
CHECKED		
APPROVED		

FERMILAB PPD/ETT/ES CDMS (E-891)
ZIP MODULE
LED BLOCK DIAGRAM

SIZE	FSCM NO.	DWG. NO.	REV
B			

SCALE		SHEET 8-1