REVISIONS			
REV	DESCRIPTION	DATE	APPROVED

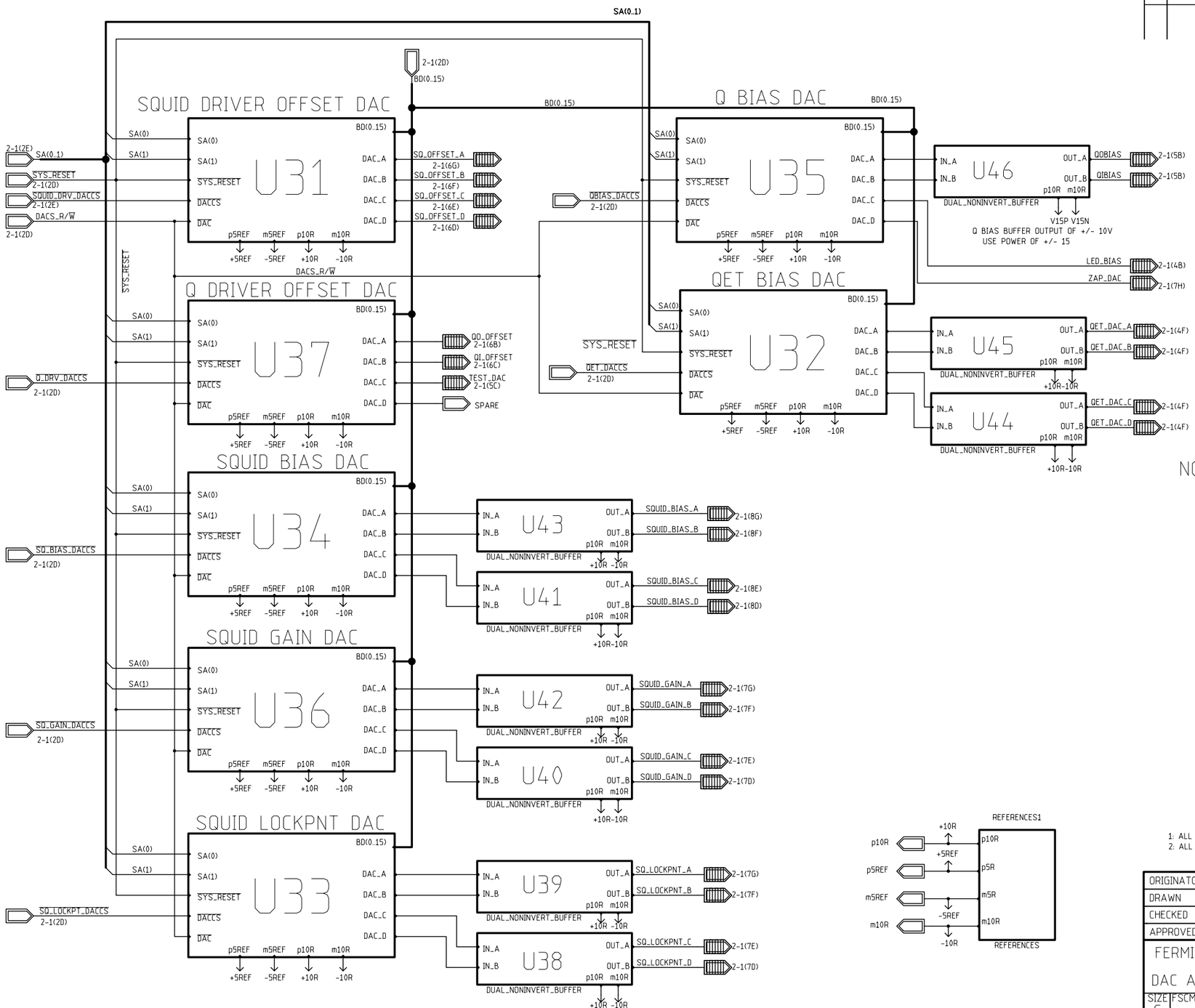

NOTE: ALL BUFFERS ARE NON-INVERTING

1: ALL RESISTORS ARE 1% UNLESS OTHERWISE STATED
2: ALL LOGIC LEVELS ARE HIGH TRUE

	NAME	DATE
ORIGINATOR	MERLE HALDEMAN	11/16/98
DRAWN	BRUCE MERKEL	11/16/98
CHECKED	TOM CRENNA	1/8/99
APPROVED		

FERMILAB PPD/ETT/ES CDMS (E-891)
ZIP MODULE
DAC AND BUFFERS BLOCK DIAGRAM

SIZE	FSCM NO.	DWG. NO.	REV
C			1
SCALE		SHEET 12-1	