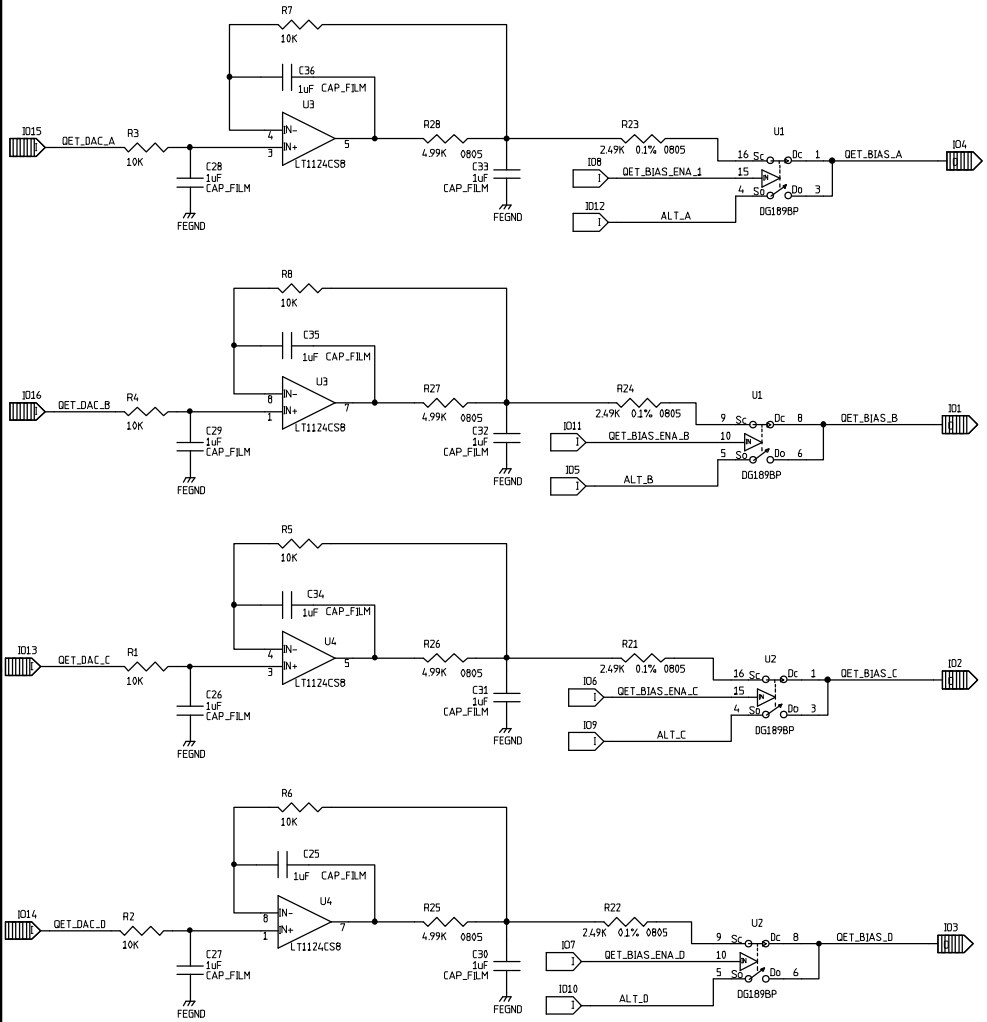

REVISIONS			
REV	DESCRIPTION	DATE	APPROVED
1	REPLACED 1uF CAPS WITH BACK TO BACK 4.7uF TANT. CAPS	2 29 00	BDM
2	REPLACED RESISTORS R21-R24 WITH 2.49K	3/28/01	BDM

	NAME	DATE
ORIGINATOR	MERLE HALDEMAN	06/17/99
DRAWN	BRUCE MERKEL	07/16/99
CHECKED		
APPROVED		

FERMILAB PPD/ETT/ES CDMS (E-891)
ZIP MODULE
QET FRONT END

SIZE	FSCM NO.	DWG. NO.	REV
C			2
SCALE		SHEET 5-2	