REVISIONS			
REV	DESCRIPTION	DATE	APPROVED

RELAY SHOWN IN
DEENERGIZED STATE

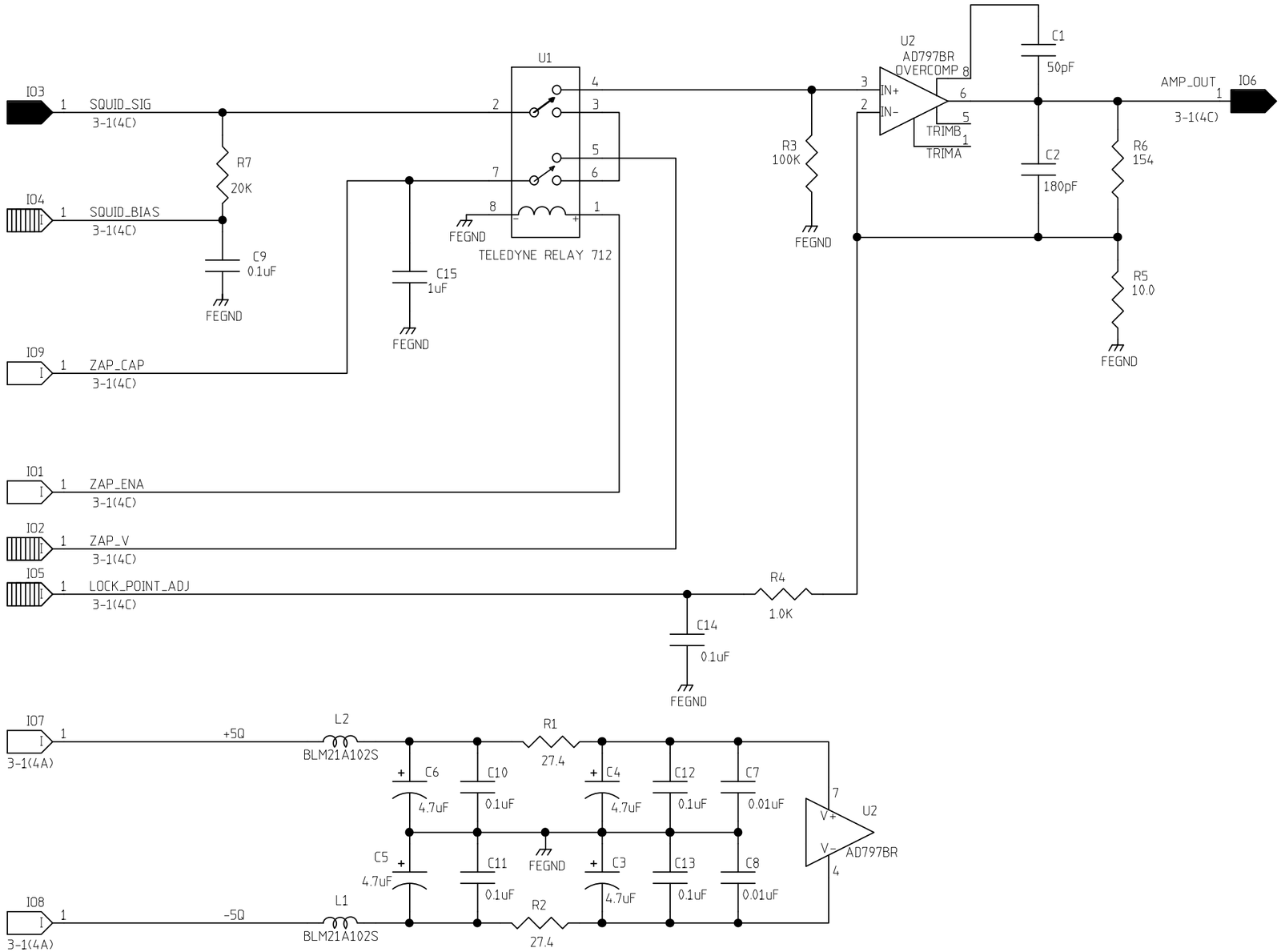

	NAME	DATE
ORIGINATOR	MERLE HALDEMAN	11/11/98
DRAWN	BRUCE MERKEL	11/11/98
CHECKED	TOM CRENNA	1/6/99
APPROVED		

FERMILAB PPD/ETT/ES CDMS (E-891)
ZIP MODULE
SQUID FRONT END

SIZE	FSCM NO.	DWG. NO.	REV
B			
SCALE		SHEET 3-2	

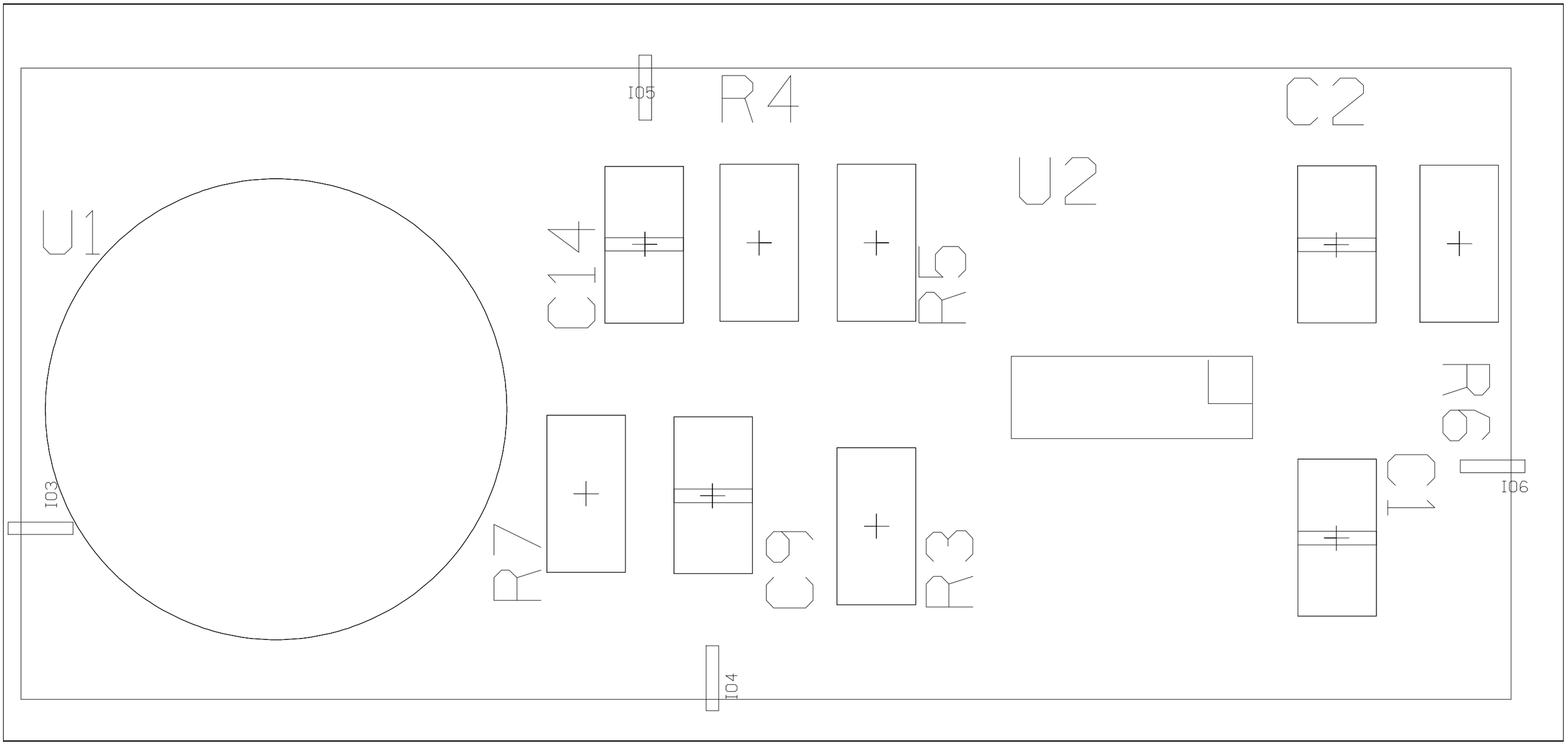

I05
R4
C2
U2
U1
C14
R5
R6
C1
I06
I03
R7
C9
R3
I04

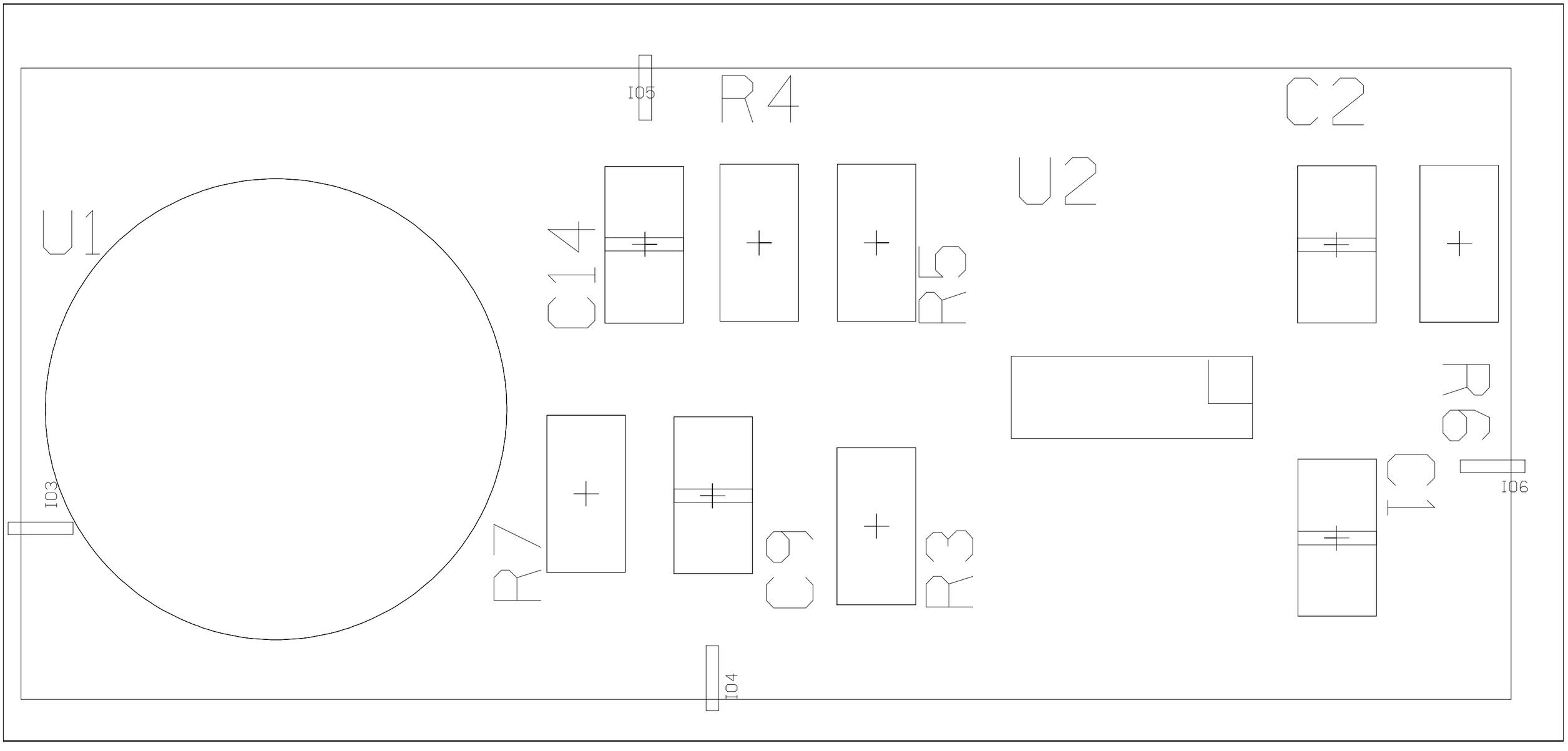

I05
R4
C2
U2
U1
C14
R5
R6
C1
I06
I03
R7
C9
R3
I04

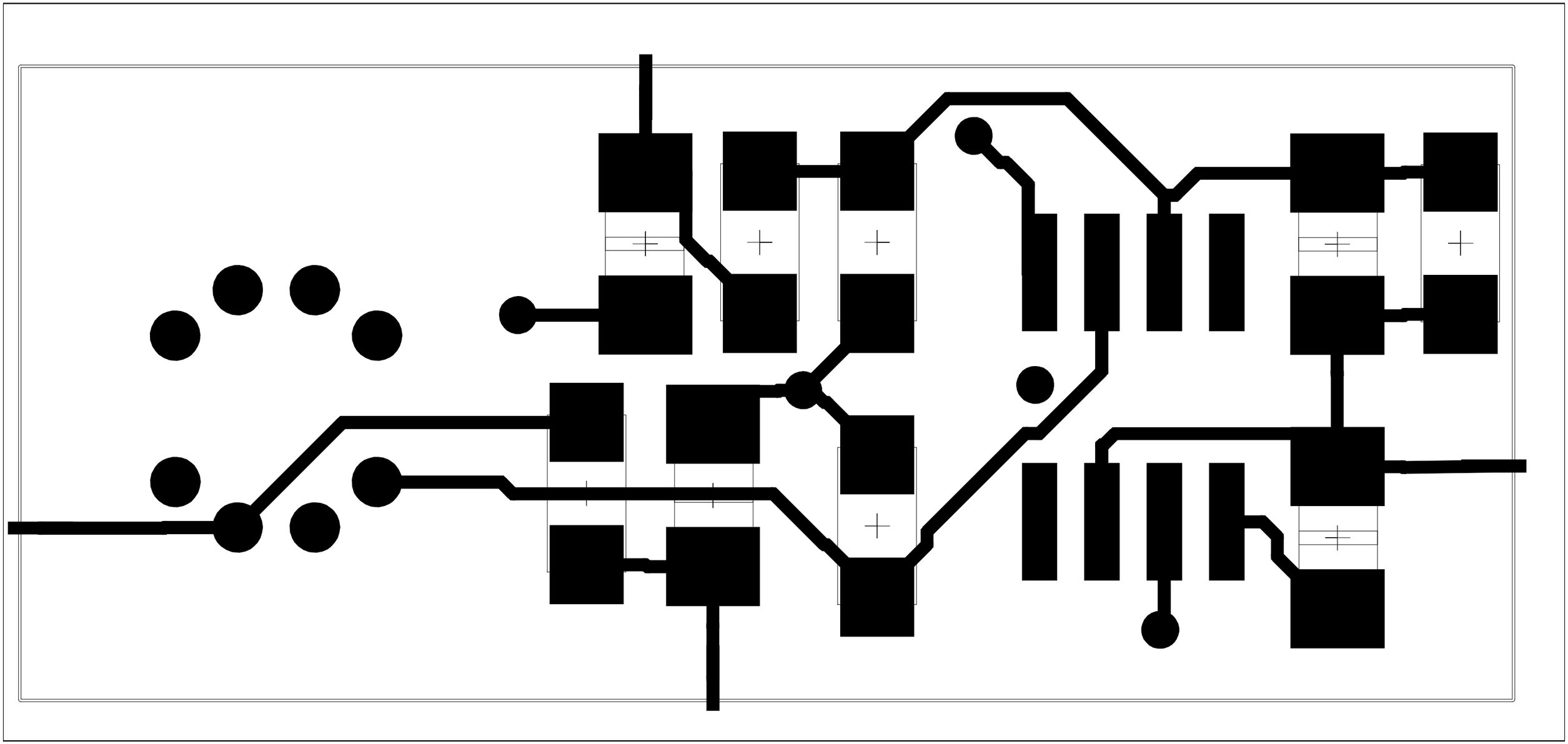

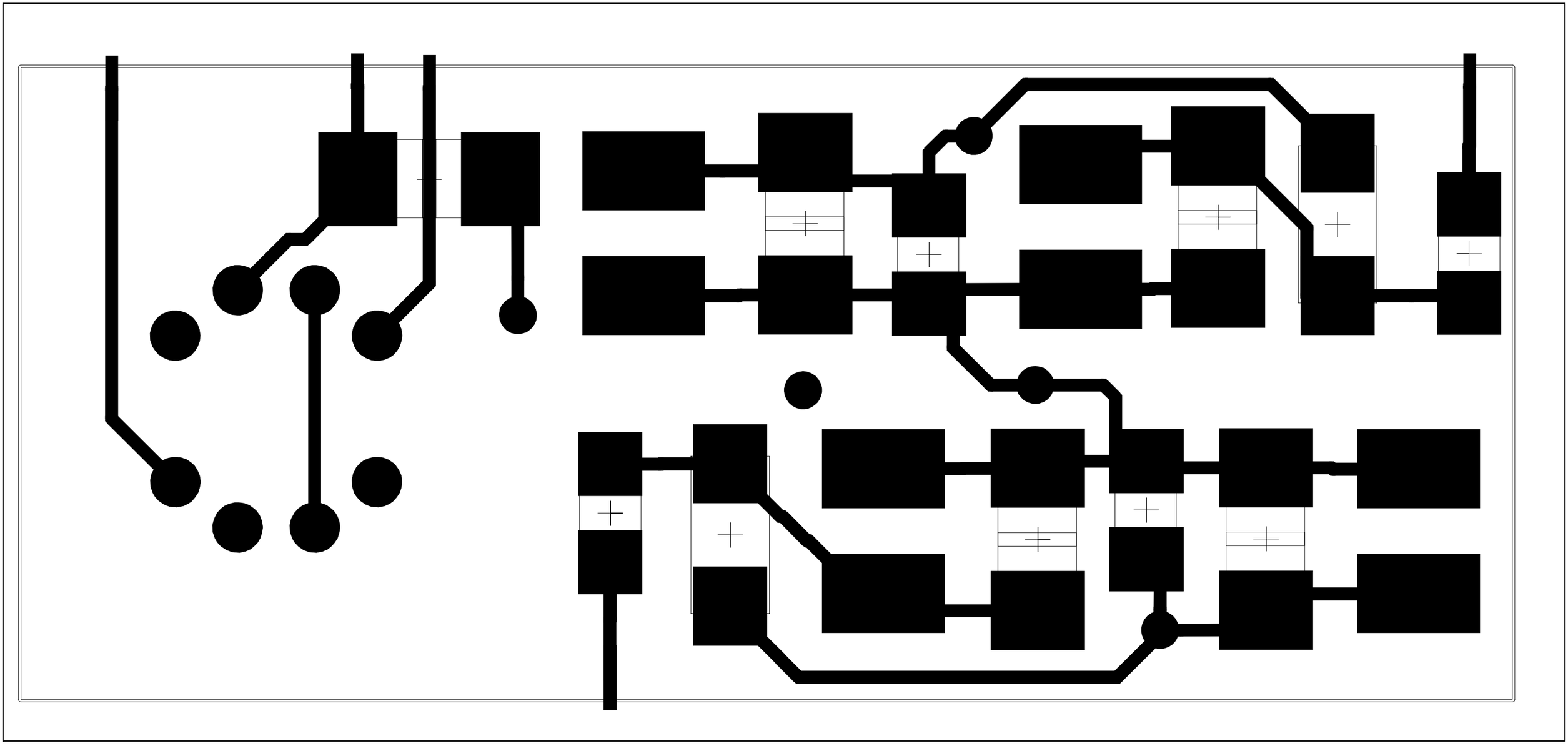

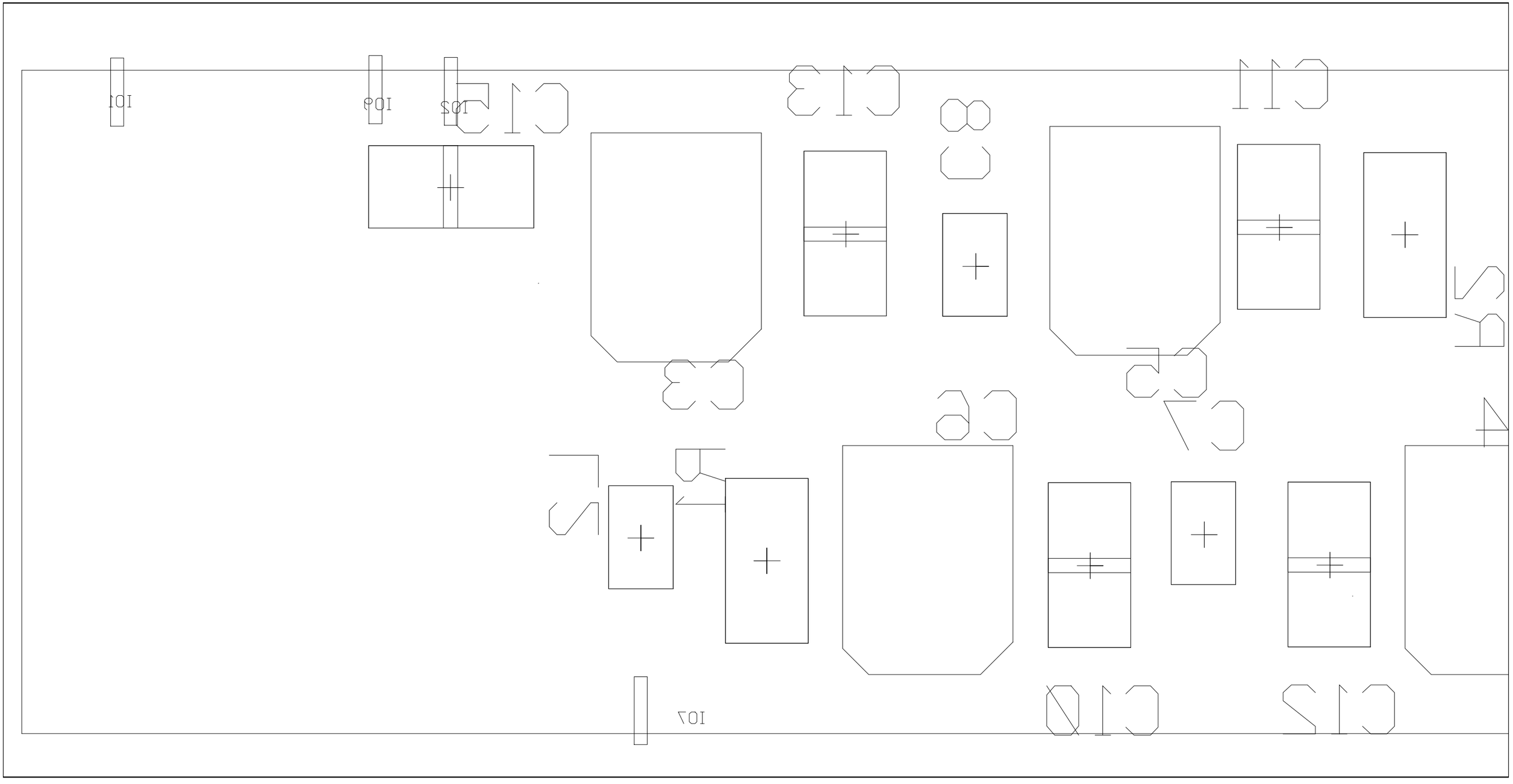
C11
C13
C14
102
109
101
C8
C3
C6
C5
C7
C4
C12
C10
107

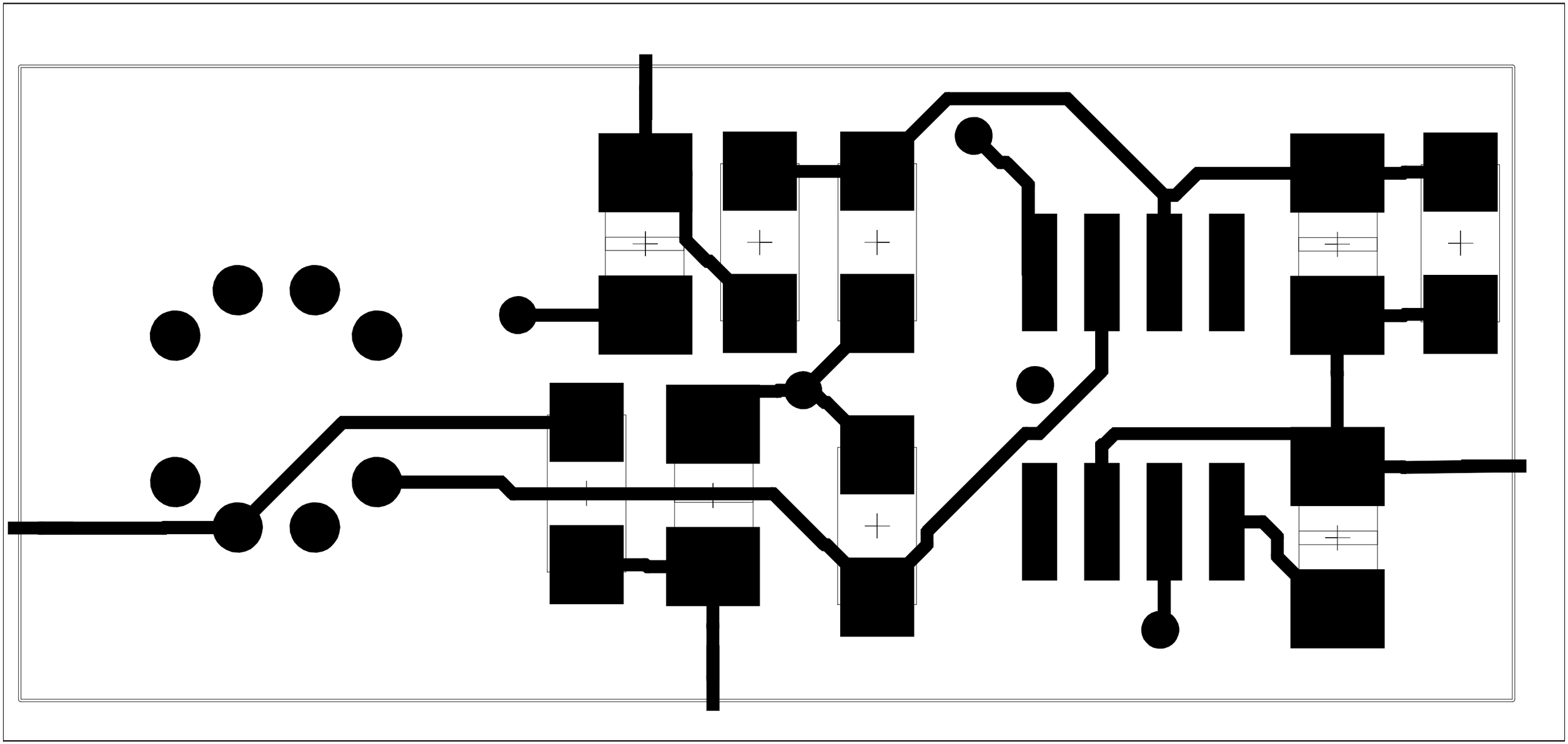

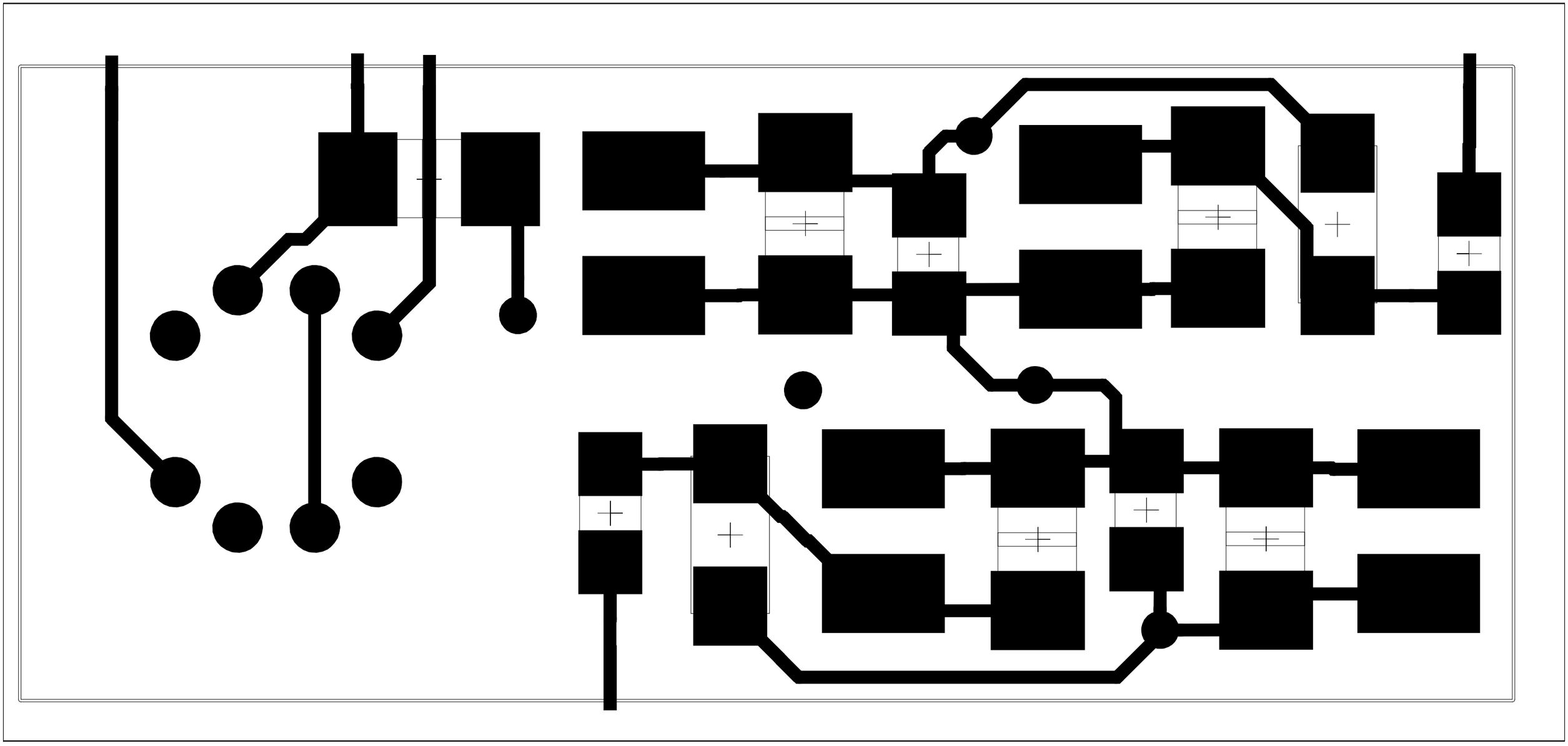

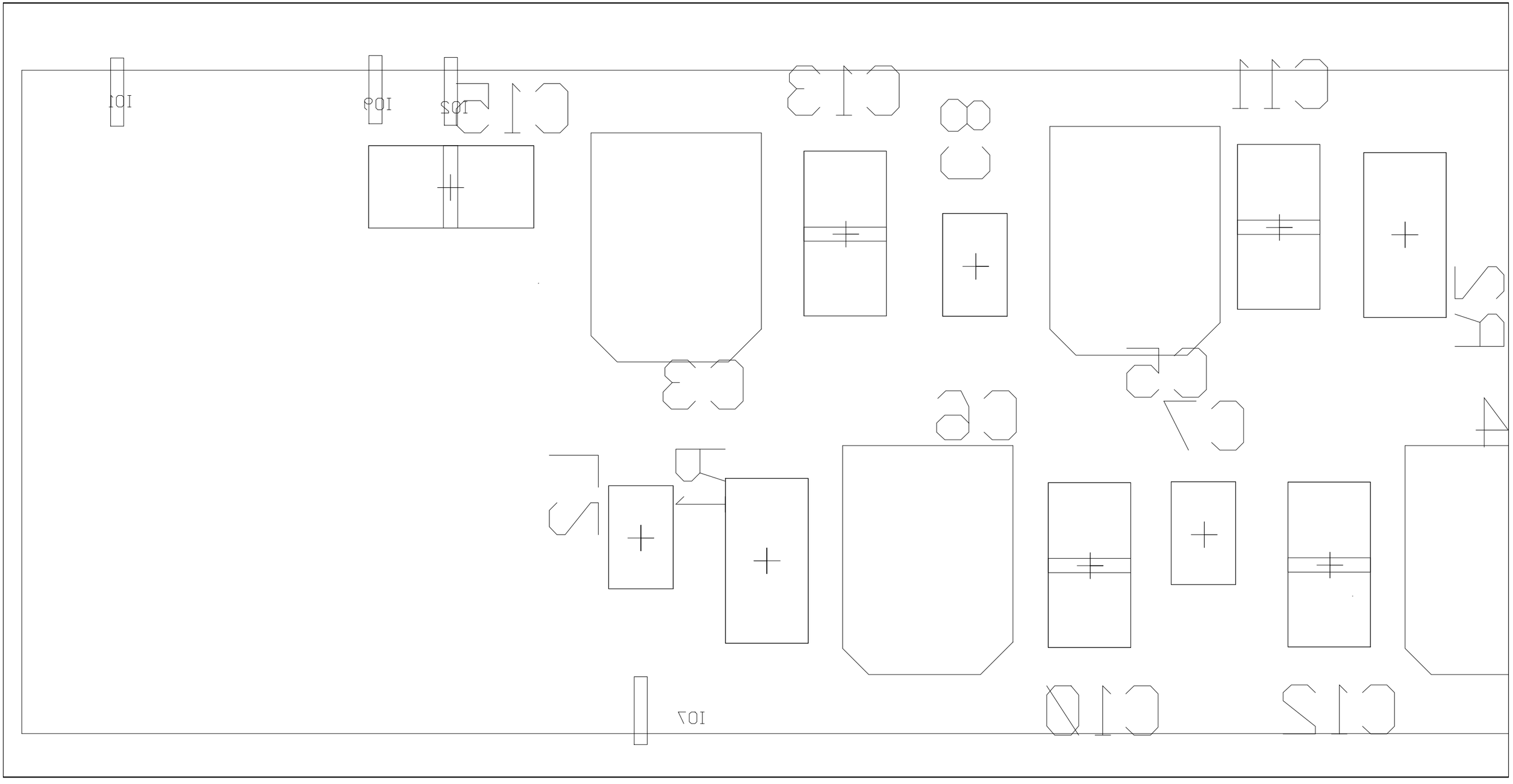
C11
C13
C14
102
109
101
C8
C3
C6
C5
C7
C4
C12
C10
107