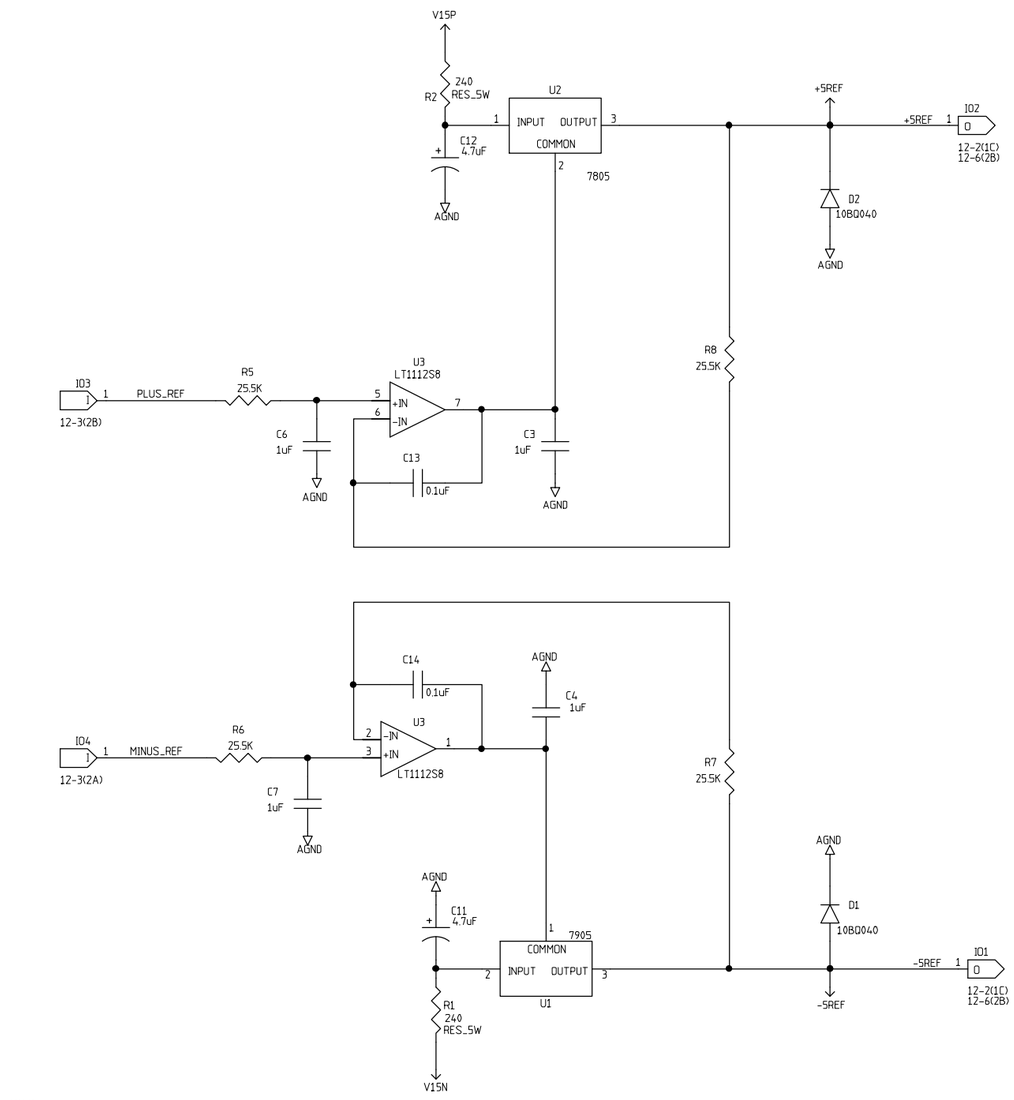

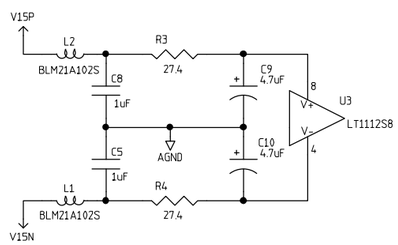

REVISIONS			
REV	DESCRIPTION	DATE	APPROVED

	NAME	DATE
ORIGINATOR	MERLE HALDEMAN	12/01/98
DRAWN	BRUCE MERKEL	12/01/98
CHECKED	TOM CRENNA	1/8/99
APPROVED		

FERMILAB PPD/ ETT/ ES CDMS(E-891)
ZIP MODULE
DAC +/-5V REFERENCES

SIZE	FSCM NO.	DWG. NO.	REV
C			
SCALE		SHEET 12-5	

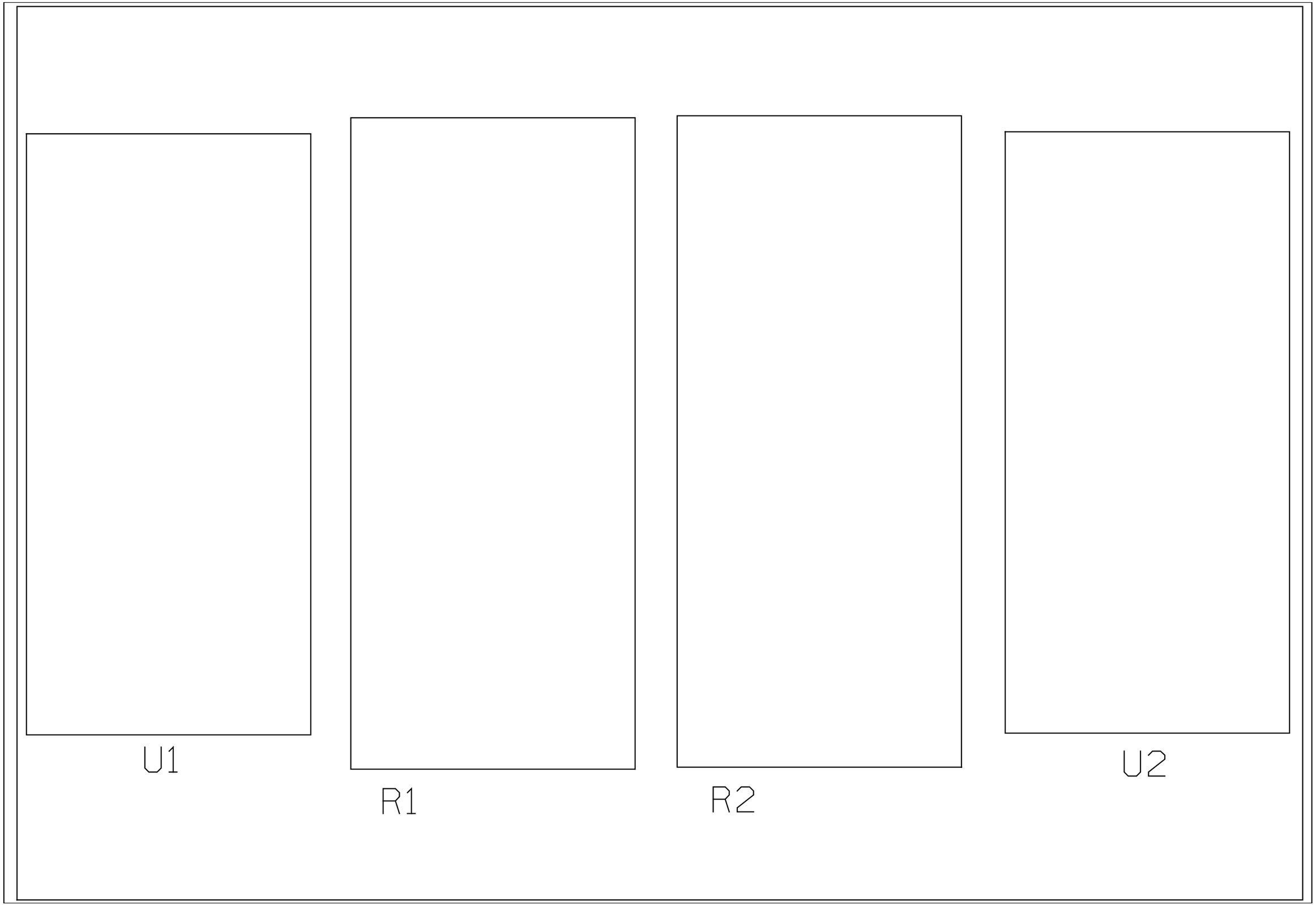
U1
R1
R2
U2

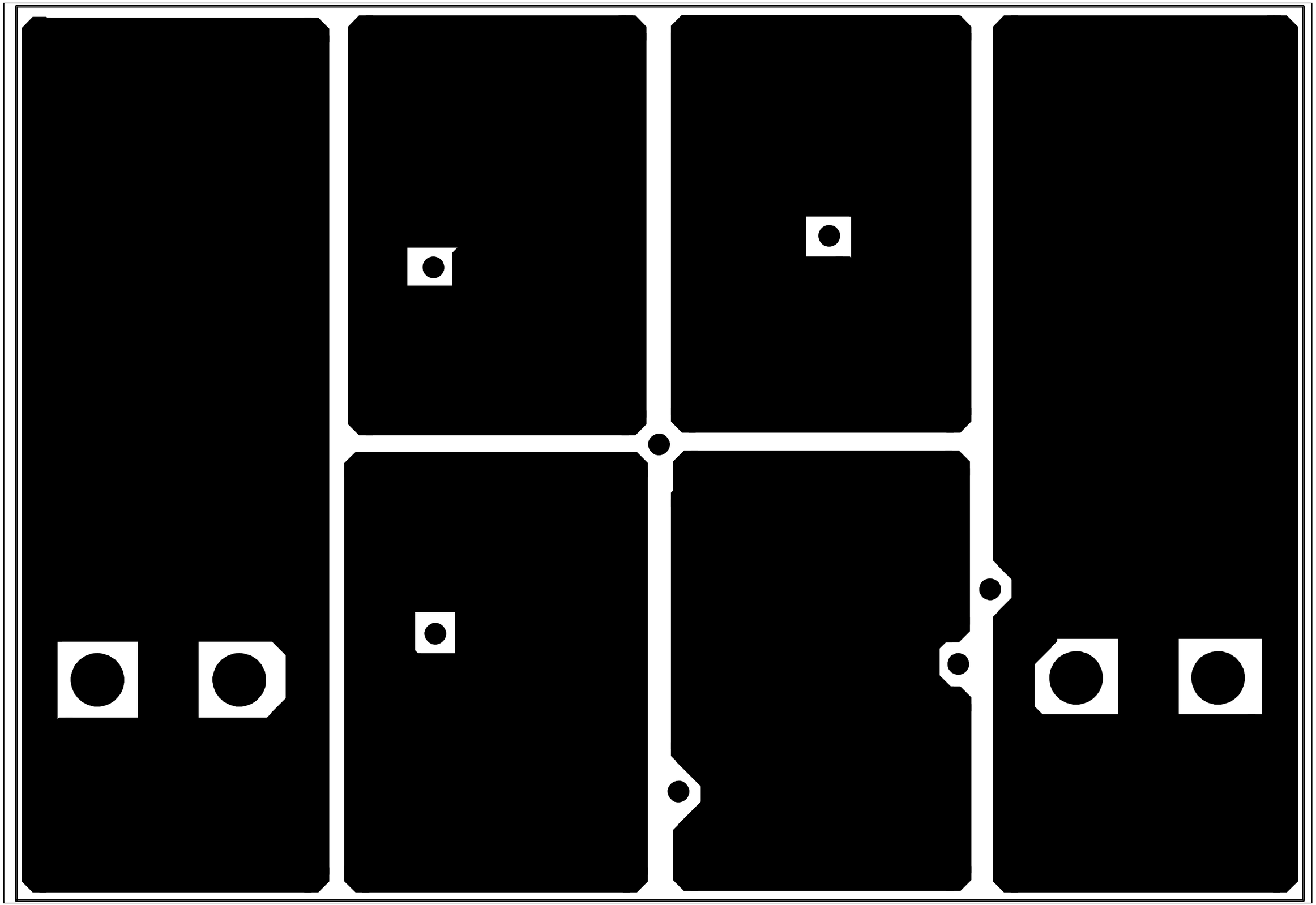

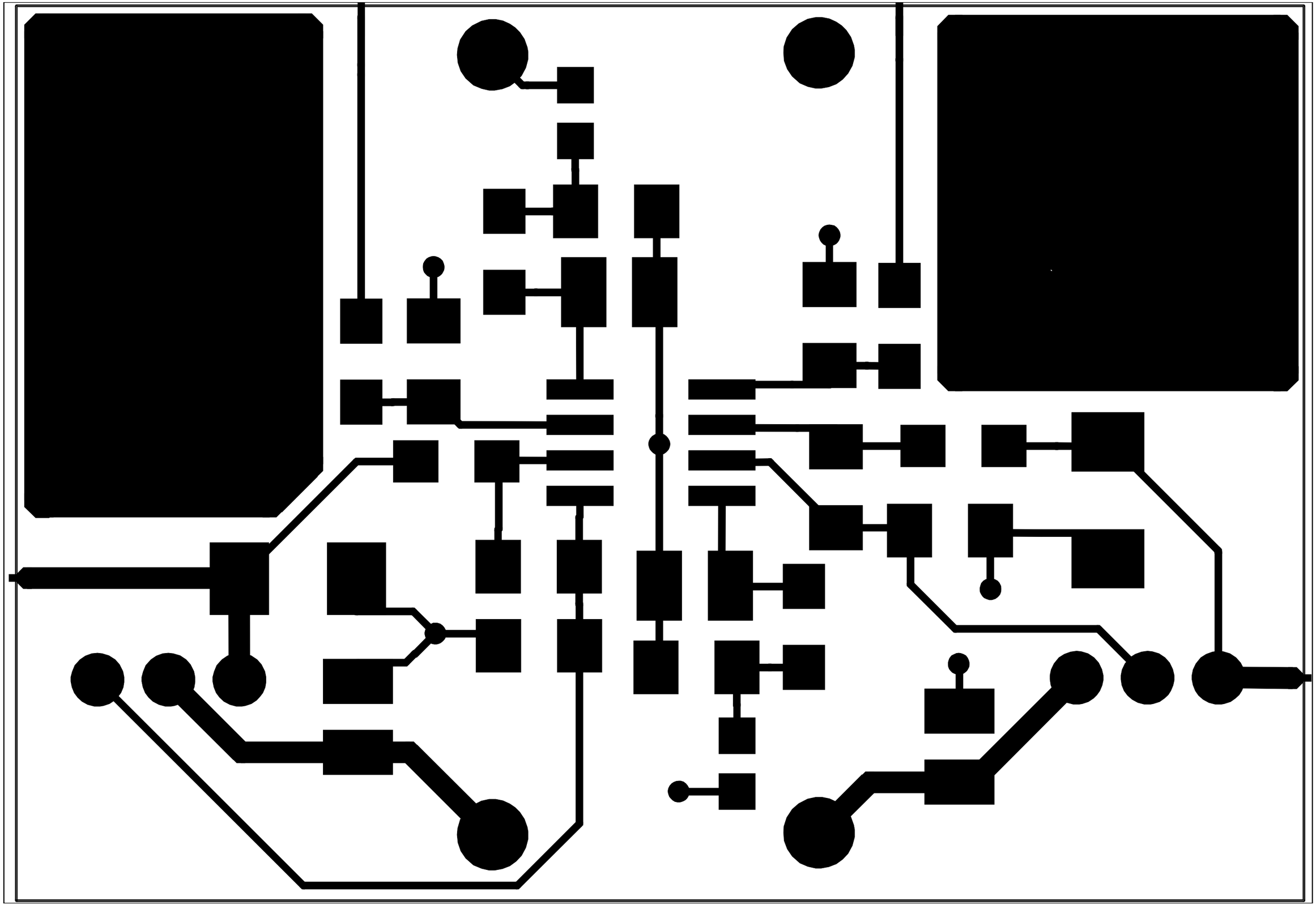

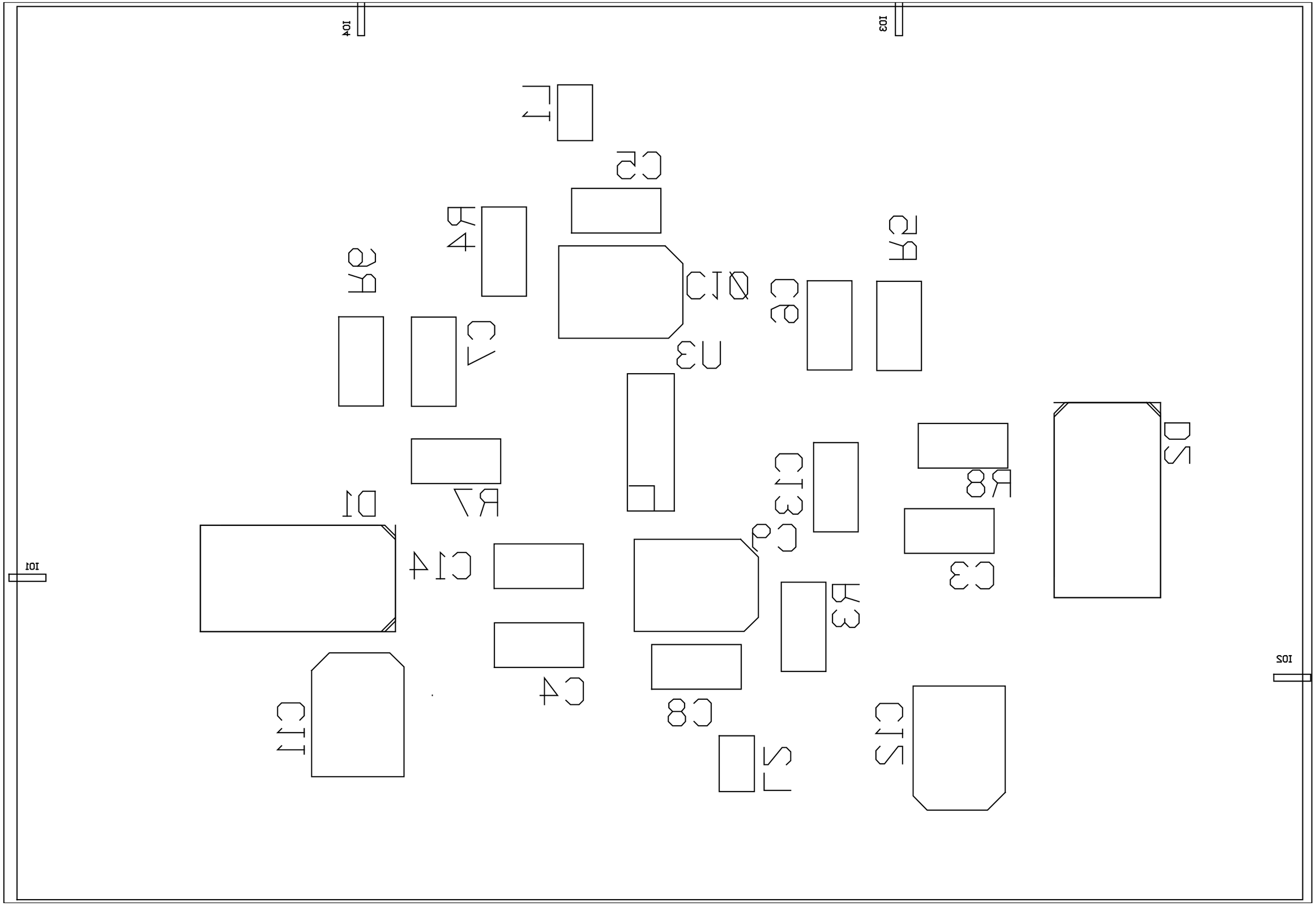
104
103
L1
C5
R4
R6
C10
U3
C6
R2
C7
R7
D1
C14
C9
C13
R8
D2
C3
R3
101
102
C4
C8
C11
L2
C12