REVISIONS			
REV	DESCRIPTION	DATE	APPROVED

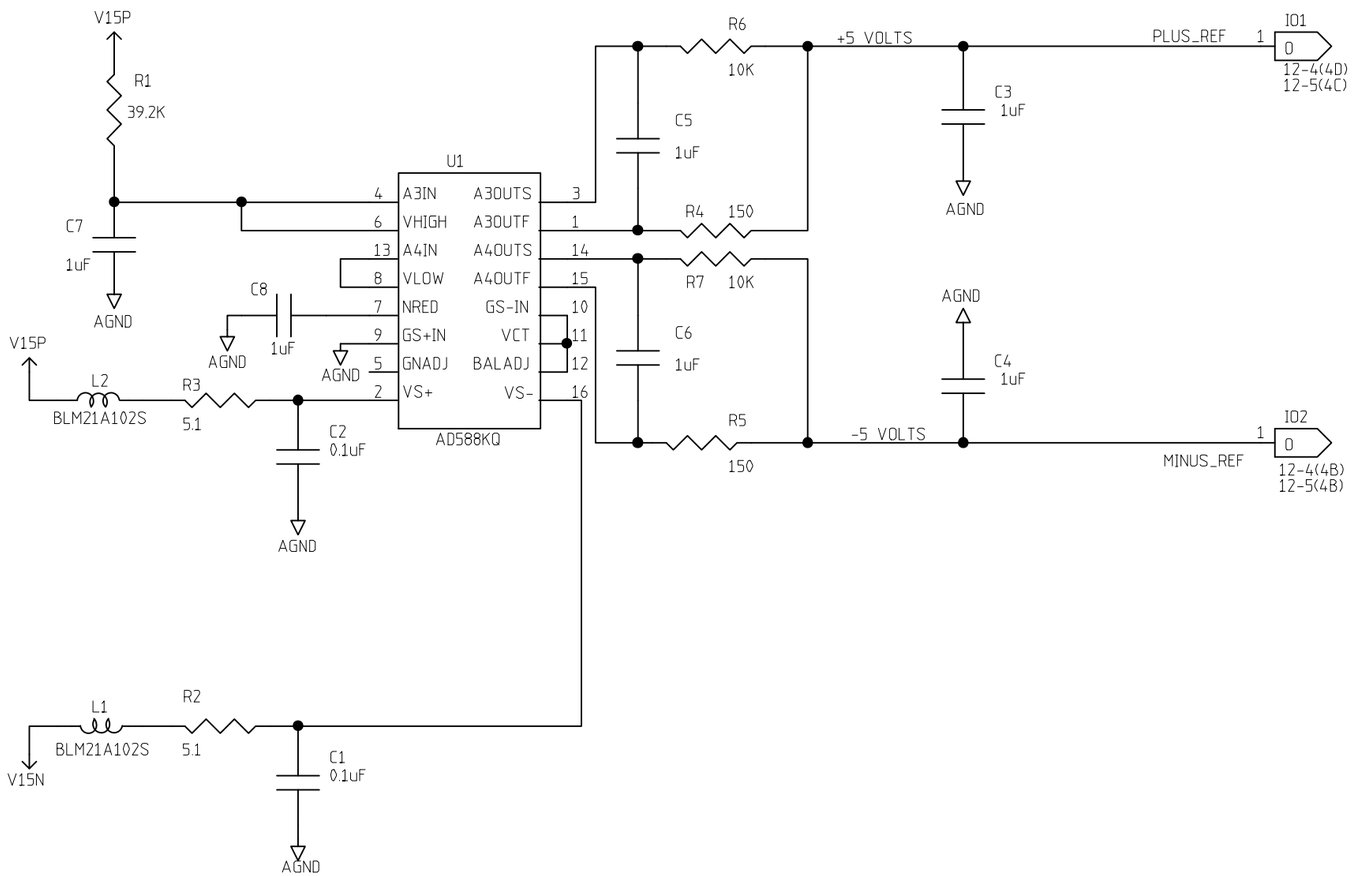

	NAME	DATE
ORIGINATOR	MERLE HALDEMAN	12/01/98
DRAWN	BRUCE MERKEL	12/01/98
CHECKED	TOM CRENNA	1/8/99
APPROVED		

FERMILAB PPD/ ETT/ ES CDMS(E-891)
ZIP MODULE
DAC PRECISION REFERENCE

SIZE	FSCM NO.	DWG. NO.	REV
B			

SCALE | SHEET 12-3

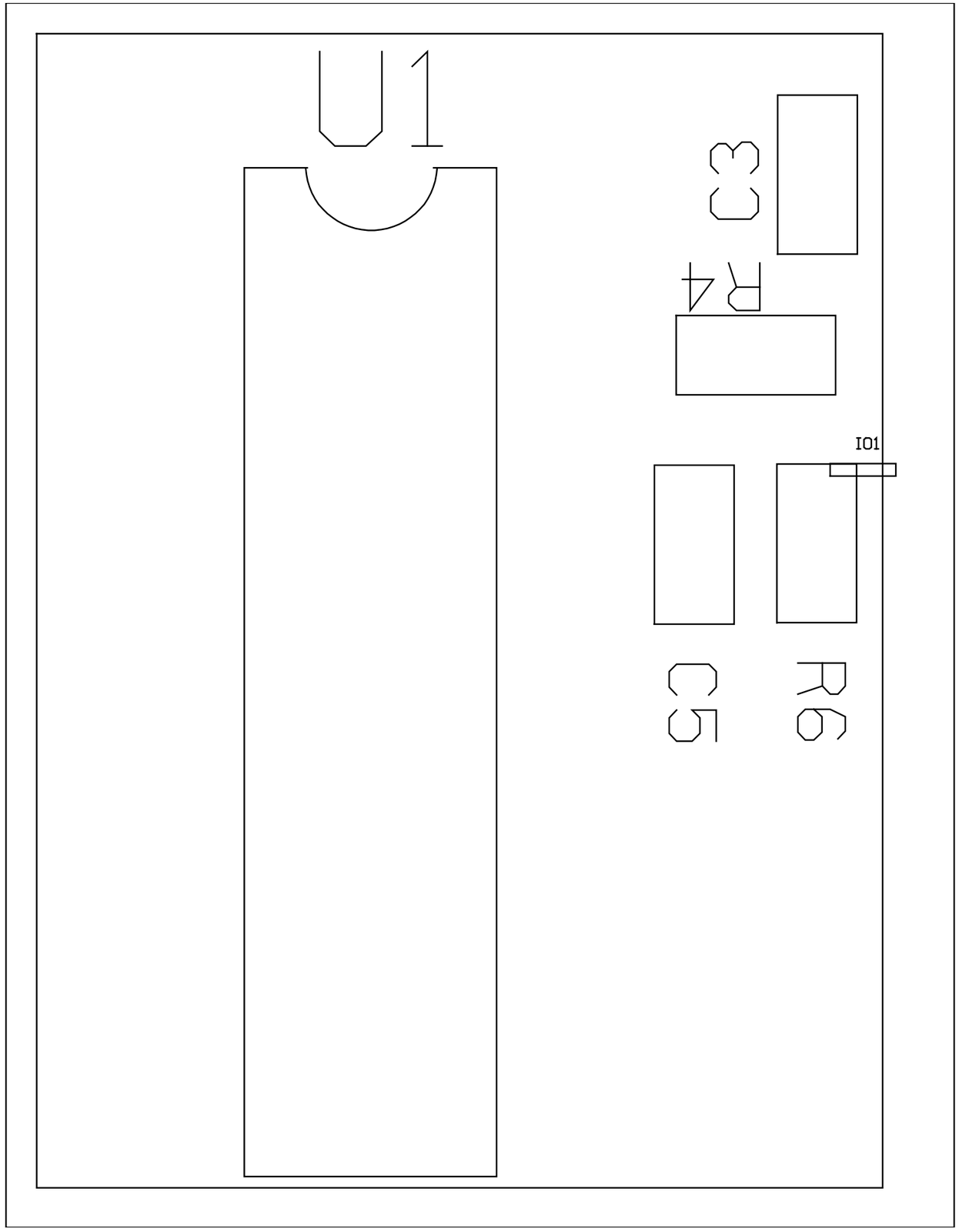
U1
R3
R4
IO1
R6
C5

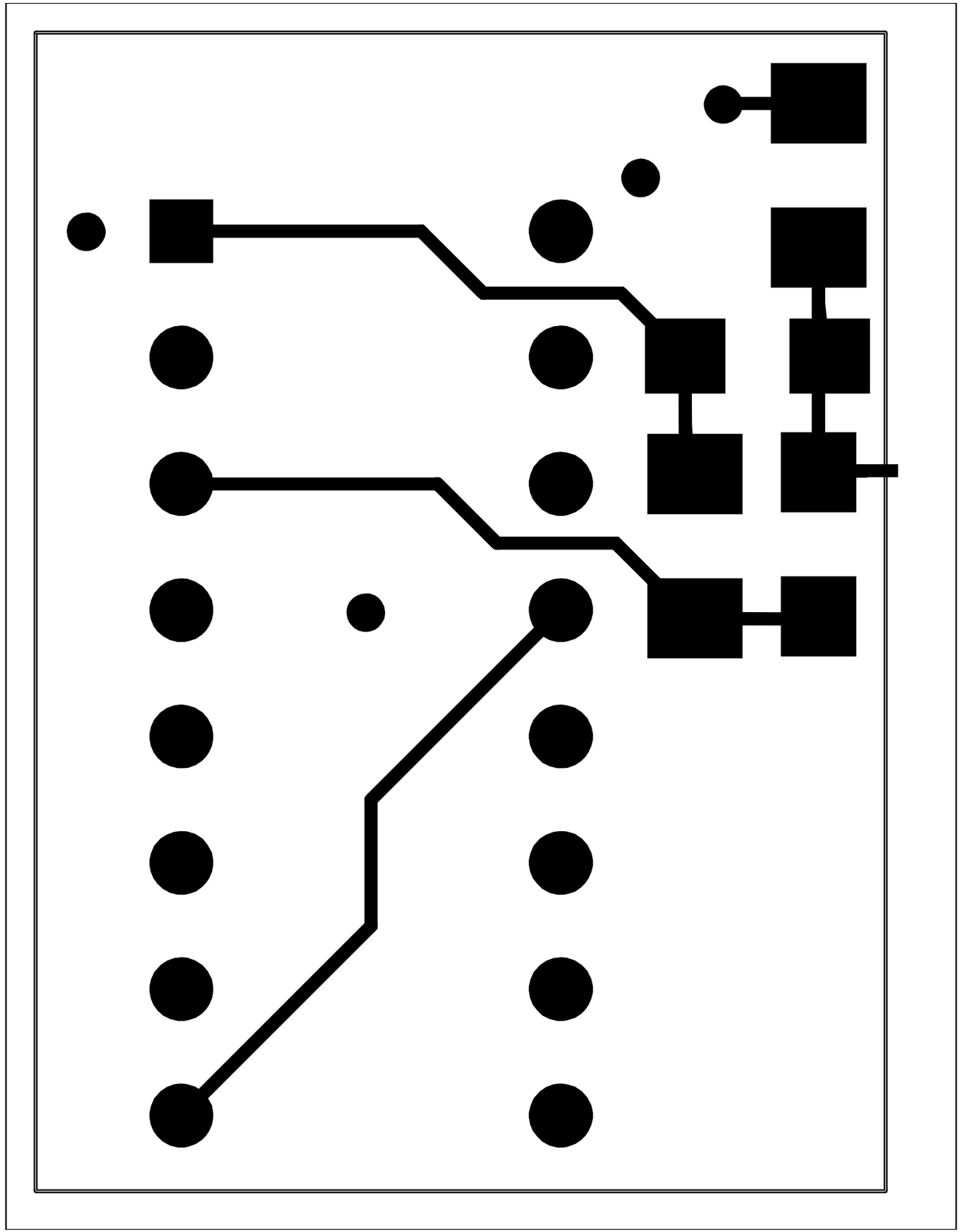

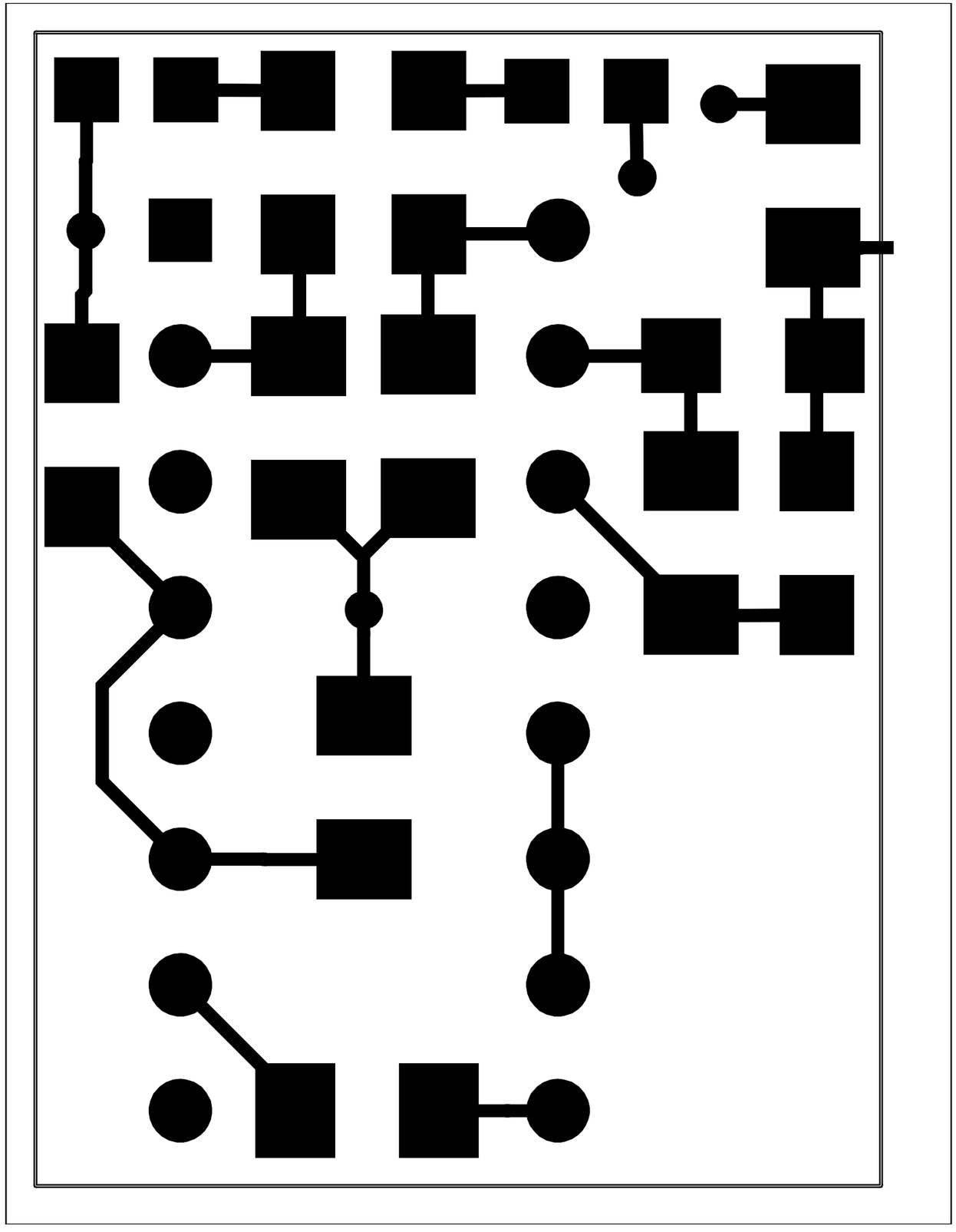

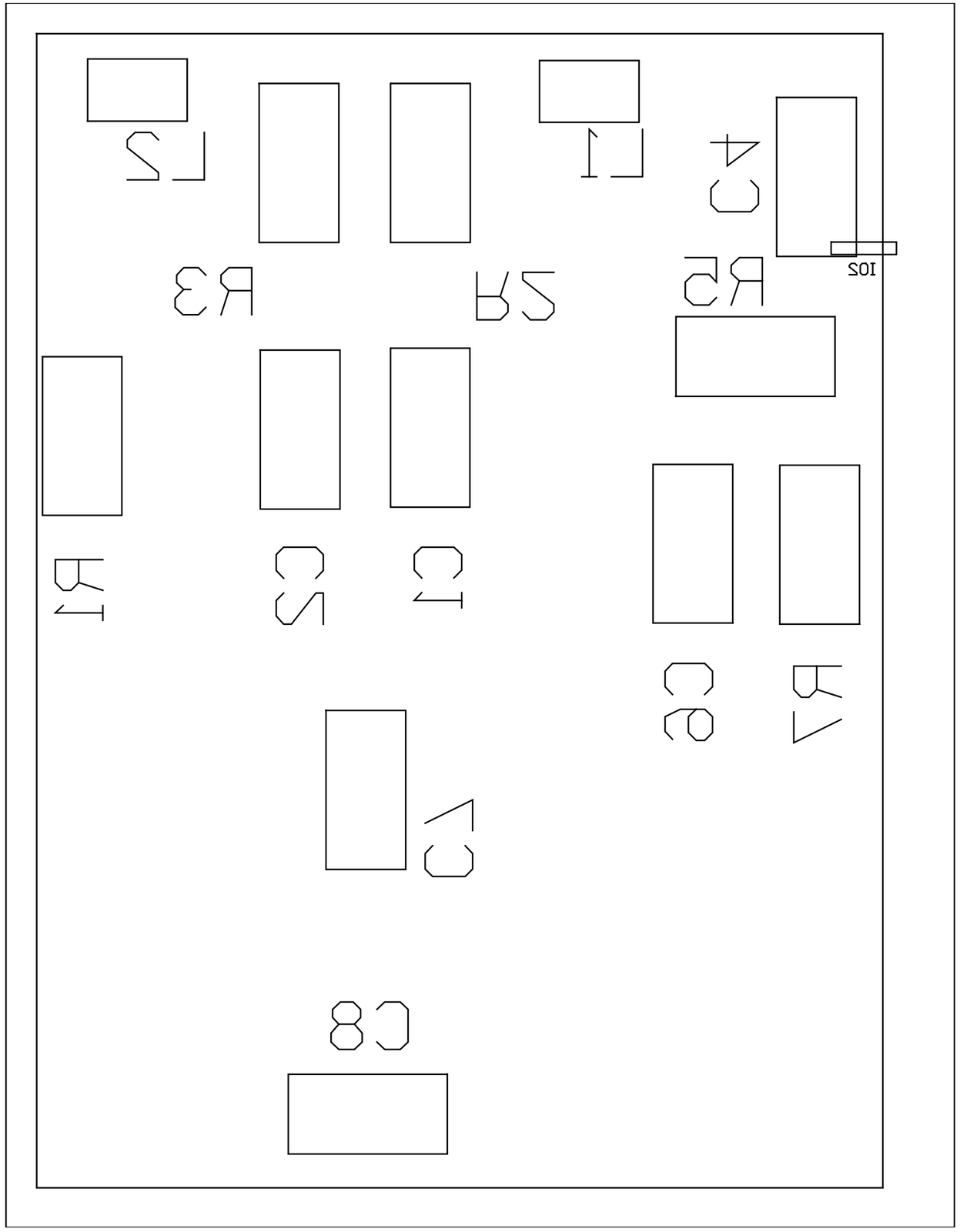
L2
L1
C4
102
R3
R2
R5
R1
C2
C1
C3
R4
C5
C8