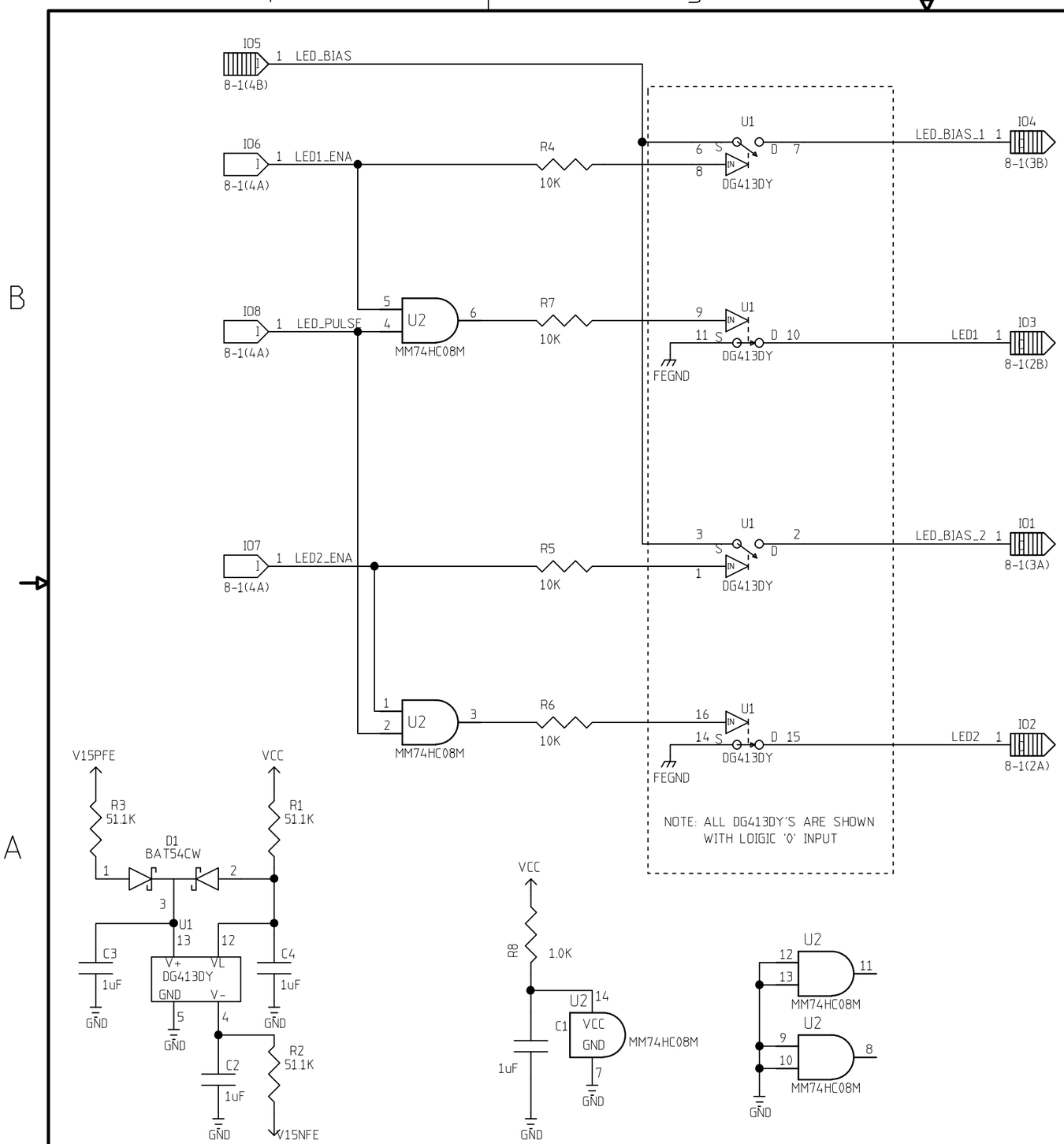

REVISIONS			
REV	DESCRIPTION	DATE	APPROVED

	NAME	DATE
ORIGINATOR	MERLE HALDEMAN	11/16/98
DRAWN	BRUCE MERKEL	12/17/98
CHECKED	TOM CRENNA	1/6/99
APPROVED		

FERMILAB PPD/ ETT/ ES CDMS(E-891)
ZIP MODULE
LED CURRENT CONTROL

SIZE	FSCM NO.	DWG. NO.	REV
B			
SCALE		SHEET 8-4	

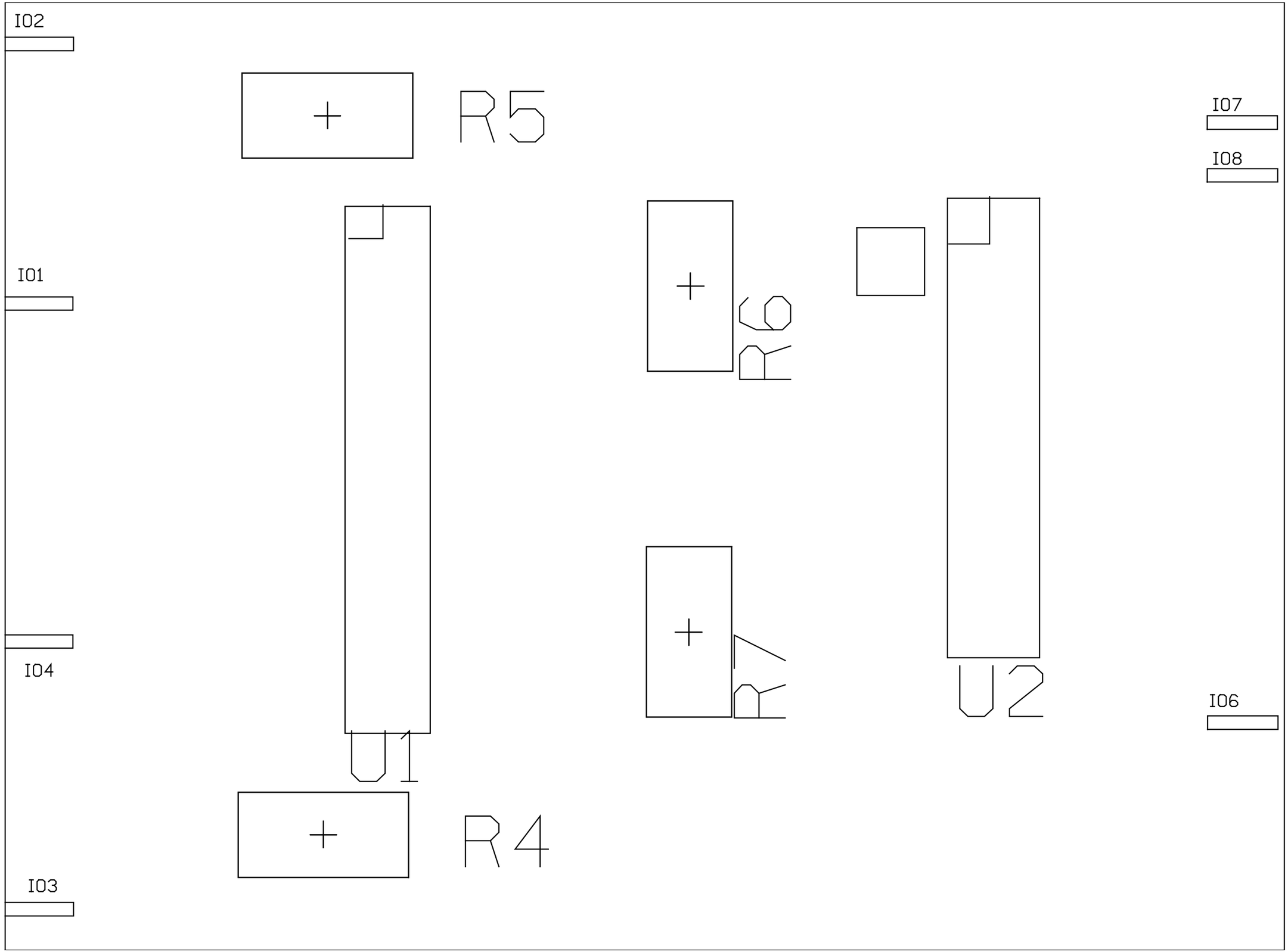
IO2
R5
IO7
IO8
IO1
C6
R3
U2
IO4
IO6
U1
R4
IO3

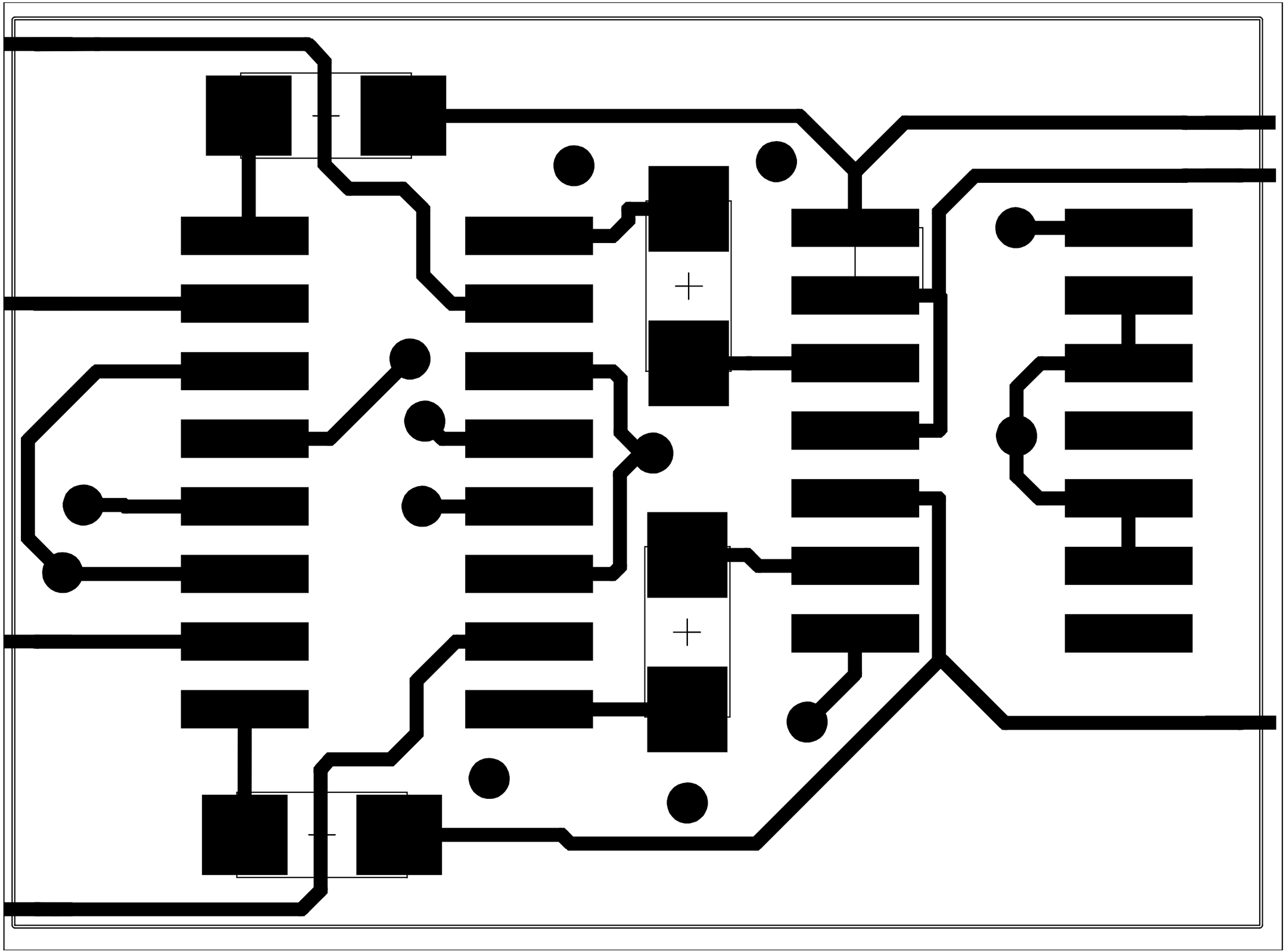

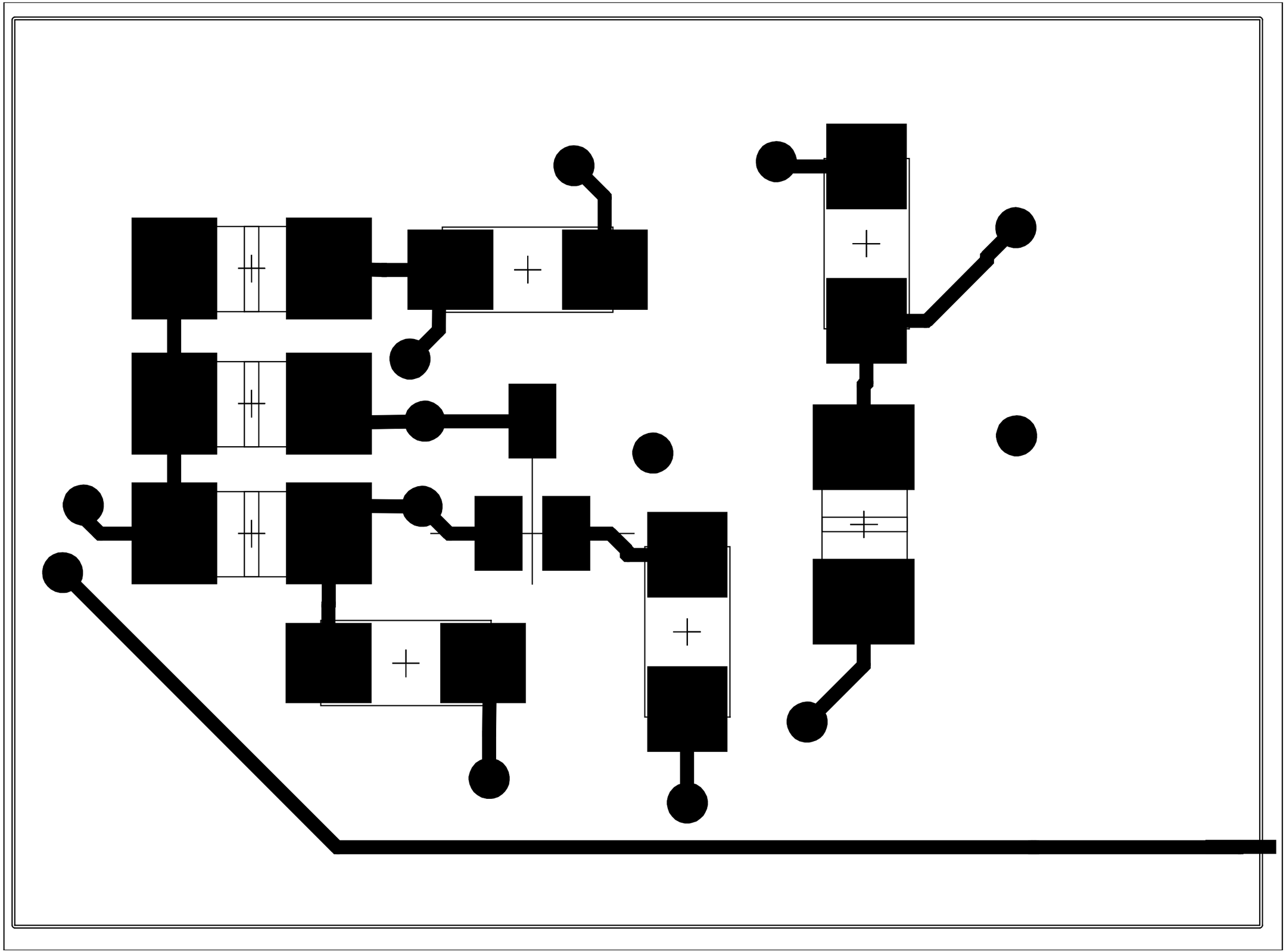

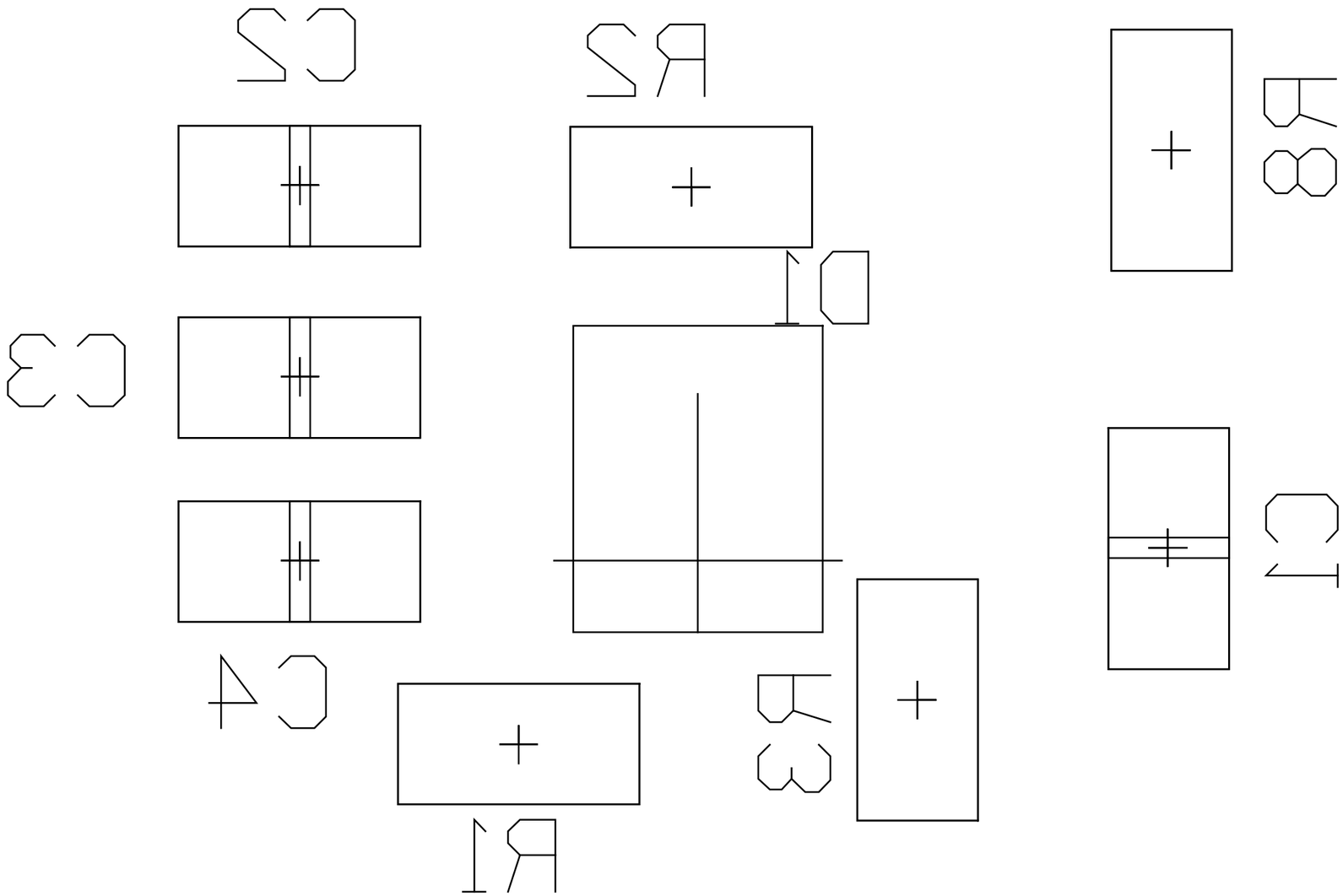

105