DWG. NO.	SH.	REV

REVISIONS

REV	DESCRIPTION	DATE	APPROVED

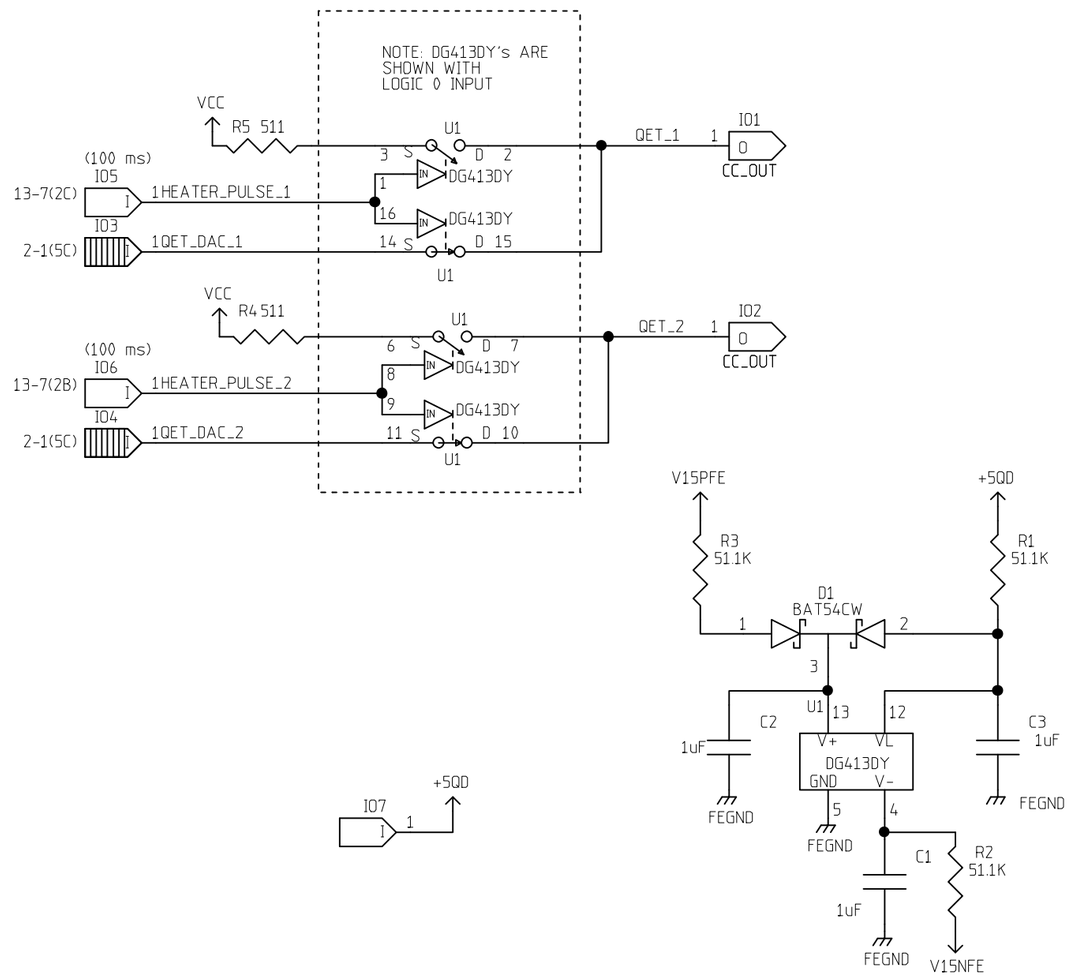

	NAME	DATE
ORIGINATOR	MERLE HALDEMAN	11/16/98
DRAWN	BRUCE MERKEL	11/16/98
CHECKED	TOM CRENNA	1/6/99
APPROVED		

FERMILAB PPD/ETT/ES CDMS (E-891)
ZIP MODULE
QET SELECTOR

SIZE	FSCM NO.	DWG. NO.	REV
B			

SCALE | SHEET 5-1

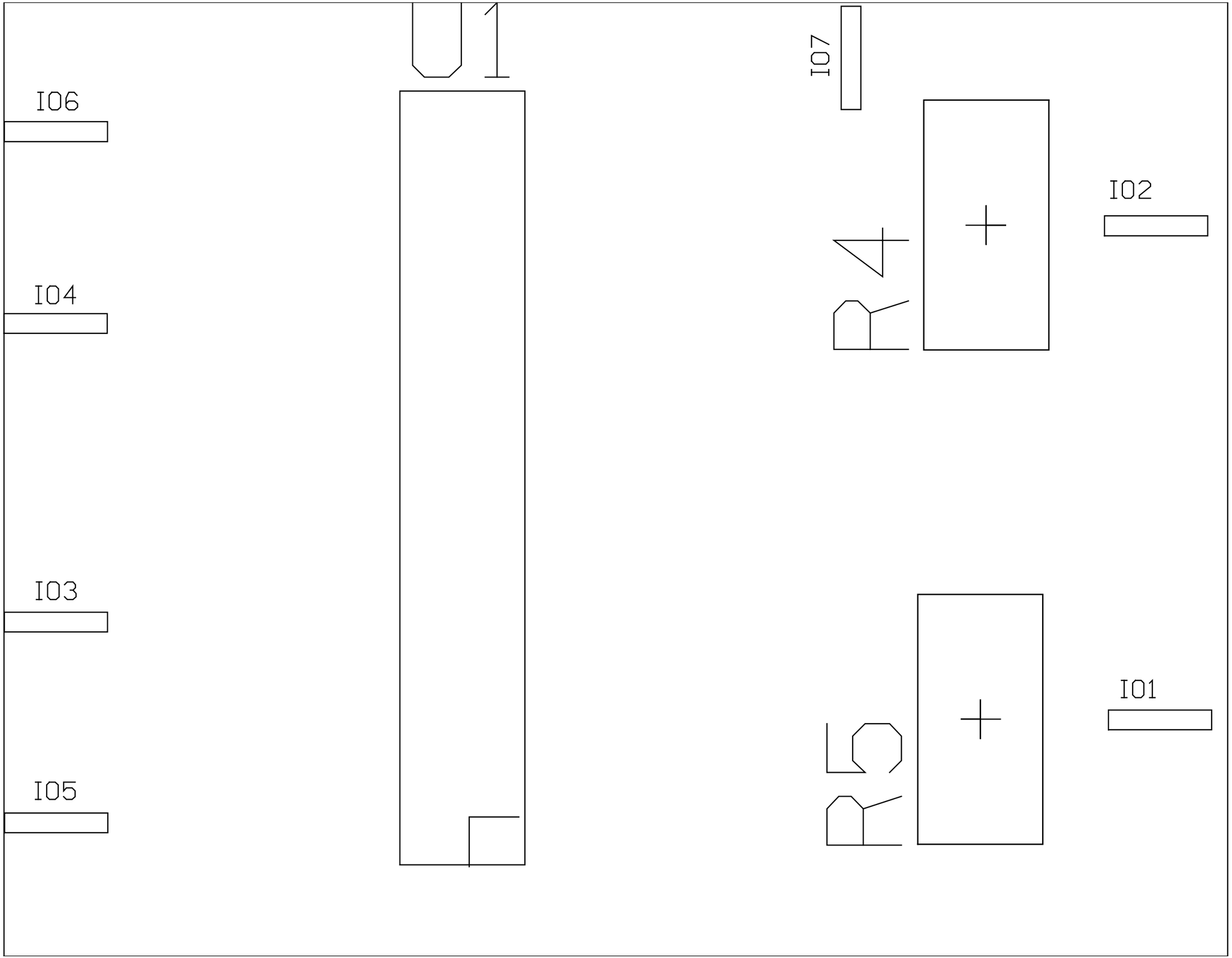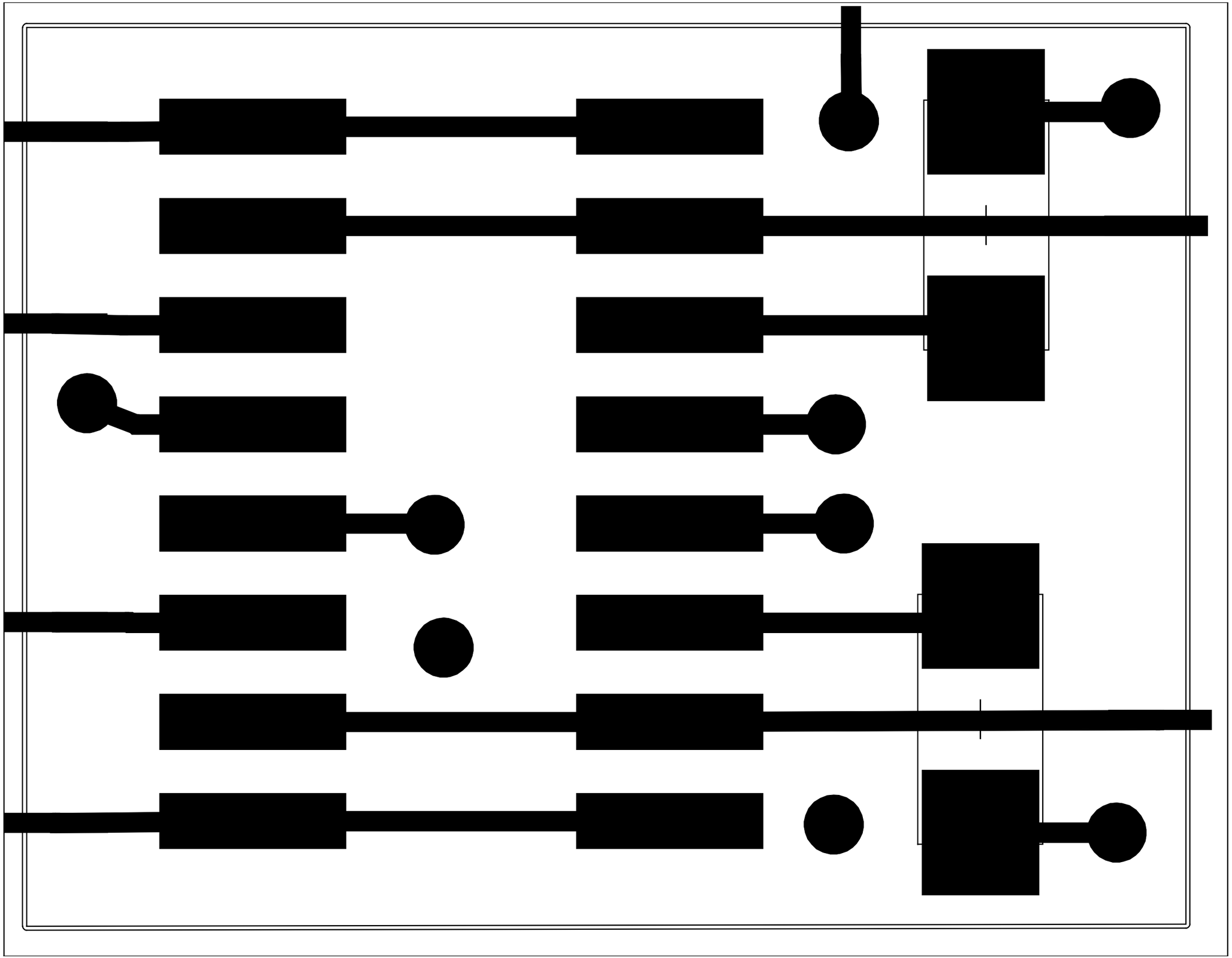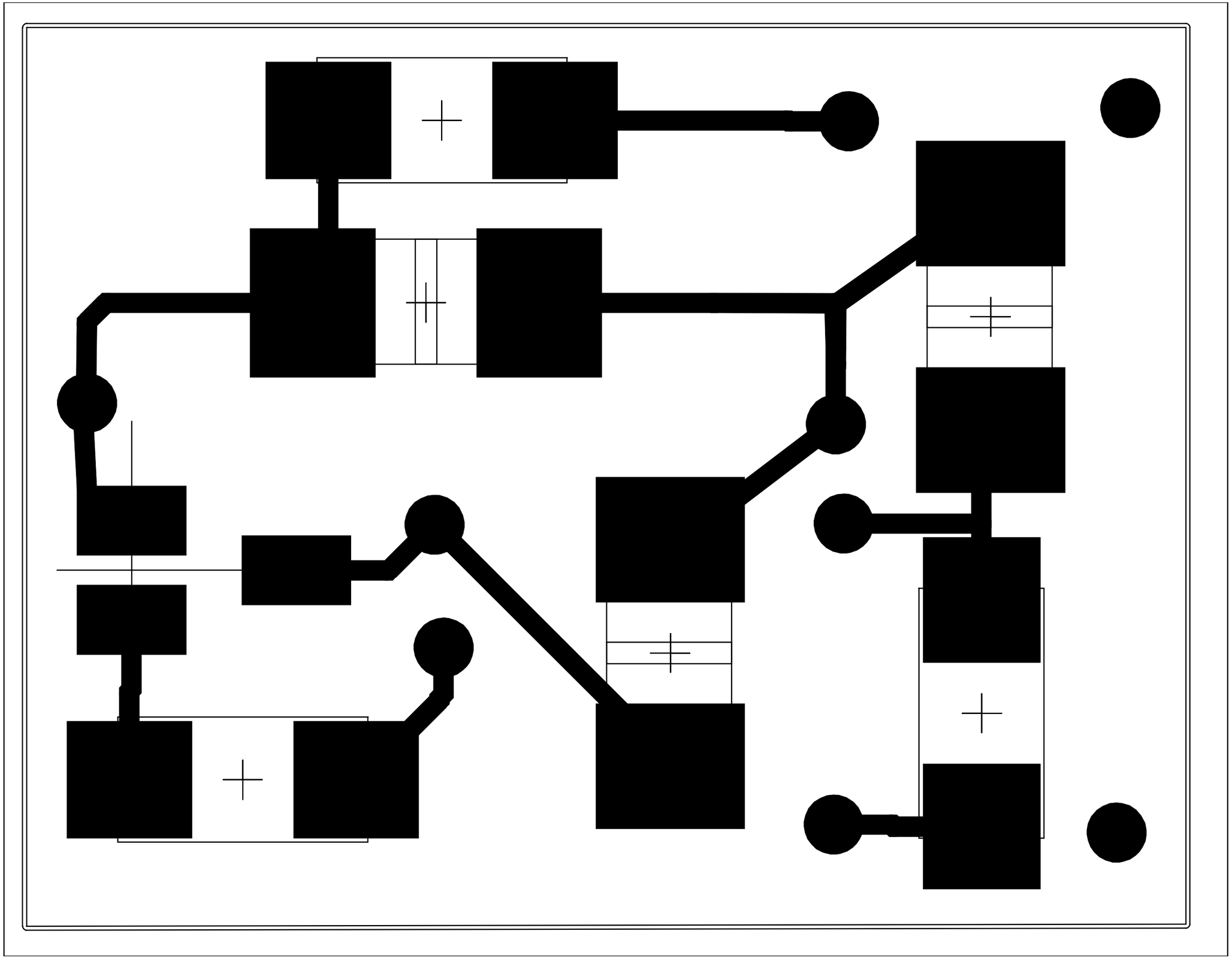
U1
IO7
IO6
IO2
R4
IO4
IO3
IO1
R5
IO5